Midwest Pooled Fund Research Program
Fiscal Years 2018-2019 (Year 28)
Research Project Number TPF-5(193) Supplement #122
NDOT Sponsoring Agency Code RPFP-18-SIGN-1

PHASE IB CRASH TESTING OF SINGLE, U-CHANNEL SIGN SUPPORTS AND SURROGATE, REUSABLE, TEST VEHICLE DEVELOPMENT

Submitted by

Ryan F. Bickhaus, B.S.
Graduate Research Assistant

Cody S. Stolle, Ph.D.
Research Assistant Professor

Jennifer D. Rasmussen, Ph.D., P.E.
Former Research Associate Professor

Ronald K. Faller, Ph.D., P.E.
Research Professor & MwRSF Director

Robert W. Bielenberg, M.S.M.E.
Research Engineer

Karla A. Lechtenberg, M.S.M.E.
Research Engineer

Jim C. Holloway, M.S.C.E.
Research Engineer & Assistant Director

MIDWEST ROADSIDE SAFETY FACILITY
Nebraska Transportation Center
University of Nebraska–Lincoln

Main Office
Prem S. Paul Research Center at Whittier School
Room 130, 2200 Vine Street
Lincoln, Nebraska 68583-0853
(402) 472-0965

Outdoor Test Site
4630 N.W. 36th Street
Lincoln, Nebraska 68524

Submitted to

MIDWEST POOLED FUND PROGRAM
Nebraska Department of Transportation
1500 Nebraska Highway 2
Lincoln, Nebraska 68502

MwRSF Research Report No. TRP-03-445-21

May 27, 2021

TECHNICAL REPORT DOCUMENTATION PAGE

1. Report No. TRP-03-445-21	**2. Government Accession No.**	**3. Recipient's Catalog No.**
4. Title and Subtitle Phase Ib Crash Testing of Single, U-Channel Sign Supports and Surrogate, Reusable, Test Vehicle Development		**5. Report Date** May 27, 2021 **6. Performing Organization Code**
7. Author(s) Bickhaus, R.F., Stolle, C.S., Rasmussen, J.D., Faller, R.K., Bielenberg, R.W., Lechtenberg, K.A., and Holloway, J.C.		**8. Performing Organization Report No.** TRP-03-445-21
9. Performing Organization Name and Address Midwest Roadside Safety Facility (MwRSF) Nebraska Transportation Center University of Nebraska-Lincoln Main Office: Prem S. Paul Research Center at Whittier School Room 130, 2200 Vine Street Lincoln, Nebraska 68583-0853 Outdoor Test Site: 4630 N.W. 36th Street Lincoln, Nebraska 68524		**10. Work Unit No.** **11. Contract** TPF-5(193) Supplement #122
12. Sponsoring Agency Name and Address Midwest Pooled Fund Program Nebraska Department of Transportation 1500 Nebraska Highway 2 Lincoln, Nebraska 68502		**13. Type of Report and Period Covered** Final Report: 2018 – 2021 **14. Sponsoring Agency Code** RPFP-18-SIGN-1
15. Supplementary Notes Prepared in cooperation with U.S. Department of Transportation, Federal Highway Administration.		

16. Abstract

Single-post, U-channel sign supports are used across the country for small signs, chevrons, and mile delineators. Despite their wide use, many U-channel sign supports have not been fully evaluated to current American Association of State Highway and Transportation Officials' (AASHTO) *Manual for Assessing Safety Hardware* (MASH) Test Level 3 (TL-3) criteria.

The objective of this research effort was to evaluate the crashworthiness of various breakaway sign systems mounted on single U-channel sign supports that were identified as critical during the Phase Ia report. A surrogate, reusable, 1100C test vehicle, which replicated the stiffness, dynamics, and geometry of a MASH 1100C small car test vehicle and consisting of a modified 2012 Kia Rio small car with reinforced undercarriage and original equipment manufacturer (OEM) bumper cover, bumper cartridge, hood, and windshield piece, was used to evaluate the performance of the sign supports.

Three component tests were conducted to verify the behavior of the surrogate, reusable, 1100C test vehicle with the full-scale crash test results from test nos. UCSS-1a, UCSS-1b, and UCSS-1c. Seven subsequent component tests were conducted on breakaway sign support systems mounted on single, U-channel posts using the surrogate, reusable, 1100C test vehicle. Five of the seven test installations performed acceptably, and two tests (test nos. UCSS-8 and UCSS-11) failed due to rear window penetration. Surrogate, reusable, 1100C test vehicle performance and further testing recommendations were made for Phase II of the research project.

17. Key Words Highway Safety, Component Test, Roadside Appurtenances, Compliance Test, MASH 2016, U-Channel Sign Supports, Surrogate Vehicle, and Breakaway Supports		**18. Distribution Statement** No restrictions. Document available from: National Technical Information Services, Springfield, Virginia 22161	
19. Security Classification (of this report) Unclassified	**20. Security Classification (of this page)** Unclassified	**21. No. of Pages** 412	**22. Price**

DISCLAIMER STATEMENT

This report was completed with funding from the Federal Highway Administration, U.S. Department of Transportation and the Midwest Pooled Fund Program. The contents of this report reflect the views and opinions of the authors who are responsible for the facts and the accuracy of the data presented herein. The contents do not necessarily reflect the official views or policies of the state highway departments participating in the Midwest Pooled Fund Program nor the Federal Highway Administration, U.S. Department of Transportation. This report does not constitute a standard, specification, regulation, product endorsement, or an endorsement of manufacturers.

UNCERTAINTY OF MEASUREMENT STATEMENT

The Midwest Roadside Safety Facility (MwRSF) has determined the uncertainty of measurements for several parameters involved in standard full-scale crash testing and non-standard testing of roadside safety features. Information regarding the uncertainty of measurements for critical parameters is available upon request by the sponsor and the Federal Highway Administration. Test nos. UCSS-2 through UCSS-11 were non-certified component tests conducted for research and development purposes only and are outside the scope of the MwRSF's A2LA Accreditation.

ACKNOWLEDGEMENTS

The authors wish to acknowledge several sources that made a contribution to this project: (1) the Midwest Pooled Fund Program funded by the California Department of Transportation, Florida Department of Transportation, Illinois Department of Transportation, Georgia Department of Transportation, Hawaii Department of Transportation, Indiana Department of Transportation, Iowa Department of Transportation, Kansas Department of Transportation, Kentucky Department of Transportation, Minnesota Department of Transportation, Missouri Department of Transportation, Nebraska Department of Transportation, New Jersey Department of Transportation, North Carolina Department of Transportation, Ohio Department of Transportation, South Carolina Department of Transportation, South Dakota Department of Transportation, Utah Department of Transportation, Virginia Department of Transportation, Wisconsin Department of Transportation, and Wyoming Department of Transportation for sponsoring this project; and (2) MwRSF personnel for constructing the support structures and conducting the crash tests.

Acknowledgement is also given to the following individuals who contributed to the completion of this research project.

Midwest Roadside Safety Facility
J.D. Reid, Ph.D., Professor
S.K. Rosenbaugh, M.S.C.E., Research Engineer
J.S. Steelman, Ph.D., P.E., Associate Professor
M. Asadollahi Pajouh, Ph.D., P.E., Research Assistant Professor
A.T. Russell, B.S.B.A., Testing and Maintenance Technician II
E.W. Krier, B.S., Construction and Testing Technician II
S.M. Tighe, Construction and Testing Technician I
D.S. Charroin, Construction and Testing Technician I
R.M. Novak, Construction and Testing Technician I
T.C. Donahoo, Construction and Testing Technician I
J.T. Jones, Construction and Testing Technician I
J.E. Kohtz, B.S.M.E., Former CAD Technician
E.L. Urbank, B.A., Research Communication Specialist
J.R. Revell, Research Communication Specialist Assistant
Z.Z. Jabr, Engineering Technician
Undergraduate and Graduate Research Assistants

California Department of Transportation
Bob Meline, Chief, Roadside Safety Research Branch
David Whitesel, P.E., Transportation Engineer
John Jewell, P.E., Senior Transportation Engineer, Specialist

Florida Department of Transportation
Derwood C. Sheppard, Jr., P.E., Design Standards Publication Manager, Roadway Design Engineer

Georgia Department of Transportation
Brent Story, P.E., State Design Policy Engineer
Frank Flanders IV, P.E., Assistant State Design Policy Engineer

Hawaii Department of Transportation
James Fu, P.E., State Bridge Engineer
Dean Takiguchi, P.E., Engineer, Bridge Design Section
Kimberly Okamura, Engineer, Bridge Design Section

Illinois Department of Transportation
Filiberto Sotelo, Safety Evaluation Engineer
Martha Brown, P.E., Safety Evaluation Unit Chief

Indiana Department of Transportation
Katherine Smutzer, P.E., Standards Engineer
Elizabeth Phillips, P.E., Standards and Policy Manager

Iowa Department of Transportation
Chris Poole, P.E., Roadside Safety Engineer
Brian Smith, P.E., Methods Engineer
Daniel Harness, P.E., Transportation Engineer Specialist
Stuart Nielsen, P.E., Transportation Engineer Administrator, Design
Elijah Gansen, P.E., Geometrics Engineer

Kansas Department of Transportation
Ron Seitz, P.E., Director of Design
Scott King, P.E., Road Design Bureau Chief
Thomas Rhoads, P.E., Road Design Leader, Bureau of Road Design
Brian Kierath Jr., Engineering Associate III, Bureau of Road Design

Kentucky Department of Transportation
Jason J. Siwula, P.E., Assistant State Highway Engineer
Kevin Martin, P.E., Transportation Engineer Specialist
Gary Newton, Engineering Tech III, Design Standards

Minnesota Department of Transportation
Michael Elle, P.E., Design Standards Engineer
Michelle Moser, P.E., Assistant Design Standards Engineer

Missouri Department of Transportation
Sarah Kleinschmit, P.E., Policy and Innovations Engineer

Nebraska Department of Transportation
Phil TenHulzen, P.E., Design Standards Engineer
Jim Knott, P.E., Construction Engineer
Mike Owen, P.E., State Roadway Design Engineer
Mick Syslo, P.E., Materials and Research Engineer & Division Head
Matt Neemann, P.E., Traffic Engineer
Dan Waddle, P.E., Traffic Engineer
Mark Fischer, P.E., PMP, Research Program Manager
Lieska Halsey, Research Project Manager
Angela Andersen, Research Coordinator
David T. Hansen, Internal Research Coordinator
Jodi Gibson, Former Research Coordinator

New Jersey Department of Transportation
Hung Tang, Senior Engineer, Transportation
Joseph Warren, Assistant Engineer, Transportation

North Carolina Department of Transportation
Neil Mastin, P.E., Manager, Transportation Program Management – Research and Development
D. D. "Bucky" Galloway, P.E., CPM, Field Operations Engineer
Brian Mayhew, P.E., State Traffic Safety Engineer
Joel Howerton, P.E., Plans and Standards Engineer

Ohio Department of Transportation
Don Fisher, P.E., Roadway Standards Engineer

South Carolina Department of Transportation
J. Adam Hixon, P.E., Design Standards Associate
Mark H. Anthony, P.E., Letting Preparation Engineer
Henry Cross, P.E., Design Standards Engineer
Jason Hall, P.E., Engineer

South Dakota Department of Transportation
David Huft, P.E., Research Engineer
Bernie Clocksin, P.E., Standards Engineer

Utah Department of Transportation
Shawn Debenham, Traffic and Safety Specialist
Glenn Blackwelder, Operations Engineer

Virginia Department of Transportation
Charles Patterson, P.E., Standards/Special Design Section Manager
Andrew Zickler, P.E., Complex Bridge Design and ABC Support Program Manager

Wisconsin Department of Transportation
Erik Emerson, P.E., Standards Development Engineer
Rodney Taylor, P.E., Roadway Design Standards Unit Supervisor

Wyoming Department of Transportation
William Wilson, P.E., Architectural and Highway Standards Engineer

Federal Highway Administration
David Mraz, Division Bridge Engineer, Nebraska Division Office

SI* (MODERN METRIC) CONVERSION FACTORS

APPROXIMATE CONVERSIONS TO SI UNITS

Symbol	When You Know	Multiply By	To Find	Symbol
		LENGTH		
in.	inches	25.4	millimeters	mm
ft	feet	0.305	meters	m
yd	yards	0.914	meters	m
mi	miles	1.61	kilometers	km
		AREA		
in^2	square inches	645.2	square millimeters	mm^2
ft^2	square feet	0.093	square meters	m^2
yd^2	square yard	0.836	square meters	m^2
ac	acres	0.405	hectares	ha
mi^2	square miles	2.59	square kilometers	km^2
		VOLUME		
fl oz	fluid ounces	29.57	milliliters	mL
gal	gallons	3.785	liters	L
ft^3	cubic feet	0.028	cubic meters	m^3
yd^3	cubic yards	0.765	cubic meters	m^3
		NOTE: volumes greater than 1,000 L shall be shown in m^3		
		MASS		
oz	ounces	28.35	grams	g
lb	pounds	0.454	kilograms	kg
T	short ton (2,000 lb)	0.907	megagrams (or “metric ton”)	Mg (or "t")
		TEMPERATURE (exact degrees)		
°F	Fahrenheit	5(F-32)/9 or (F-32)/1.8	Celsius	°C
		ILLUMINATION		
fc	foot-candles	10.76	lux	lx
fl	foot-Lamberts	3.426	candela per square meter	cd/m^2
		FORCE & PRESSURE or STRESS		
lbf	poundforce	4.45	newtons	N
lbf/in^2	poundforce per square inch	6.89	kilopascals	kPa

APPROXIMATE CONVERSIONS FROM SI UNITS

Symbol	When You Know	Multiply By	To Find	Symbol
		LENGTH		
mm	millimeters	0.039	inches	in.
m	meters	3.28	feet	ft
m	meters	1.09	yards	yd
km	kilometers	0.621	miles	mi
		AREA		
mm^2	square millimeters	0.0016	square inches	in^2
m^2	square meters	10.764	square feet	ft^2
m^2	square meters	1.195	square yard	yd^2
ha	hectares	2.47	acres	ac
km^2	square kilometers	0.386	square miles	mi^2
		VOLUME		
mL	milliliter	0.034	fluid ounces	fl oz
L	liters	0.264	gallons	gal
m^3	cubic meters	35.314	cubic feet	ft^3
m^3	cubic meters	1.307	cubic yards	yd^3
		MASS		
g	grams	0.035	ounces	oz
kg	kilograms	2.202	pounds	lb
Mg (or "t")	megagrams (or “metric ton”)	1.103	short ton (2,000 lb)	T
		TEMPERATURE (exact degrees)		
°C	Celsius	1.8C+32	Fahrenheit	°F
		ILLUMINATION		
lx	lux	0.0929	foot-candles	fc
cd/m^2	candela per square meter	0.2919	foot-Lamberts	fl
		FORCE & PRESSURE or STRESS		
N	newtons	0.225	poundforce	lbf
kPa	kilopascals	0.145	poundforce per square inch	lbf/in^2

*SI is the symbol for the International System of Units. Appropriate rounding should be made to comply with Section 4 of ASTM E380.

TABLE OF CONTENTS

DISCLAIMER STATEMENT ii

UNCERTAINTY OF MEASUREMENT STATEMENT ii

ACKNOWLEDGEMENTS iii

LIST OF FIGURES x

LIST OF TABLES xviii

1 INTRODUCTION 1
- 1.1 Background 1
- 1.2 Objective 1
- 1.3 Scope 1

2 IDENTIFICATION OF SIGN SUPPORT INSTALLATIONS FOR ANALYSIS 3
- 2.1 Summary of Phase 1a 3
- 2.2 Sign Panel Modifications 4

3 SURROGATE, REUSABLE, 1100C TEST VEHICLE DEVELOPMENT 5
- 3.1 Motivation 5
- 3.2 Evaluation of Surrogate Bogie Profiles 11
- 3.3 New Surrogate Vehicle Design Options 15
  - 3.3.1 Design No. 1 15
  - 3.3.2 Design No. 2 16
  - 3.3.3 Design No. 3 18
- 3.4 Surrogate, Reusable, 1100C Test Vehicle Selection 18

4 TEST REQUIREMENTS AND EVALUATION CRITERIA 23
- 4.1 Test Requirements 23
- 4.2 Evaluation Criteria 24

5 TEST CONDITIONS 26
- 5.1 Test Facility 26
- 5.2 Vehicle Tow and Guidance System 26
- 5.3 Test Vehicles 26
- 5.4 Data Acquisition Systems 33
  - 5.4.1 Accelerometers 33
  - 5.4.2 Rate Transducers 33
  - 5.4.3 Retroreflective Optic Speed Trap 33
  - 5.4.4 Vehicle Deformation Measurement 33
  - 5.4.5 Digital Photography 34
- 5.5 Surrogate, Reusable, 1100C Test Vehicle Repairs 45

6 VALIDATION OF SURROGATE, REUSABLE, 1100C TEST VEHICLE 46
- 6.1 Introduction 46

6.2 Surrogate, Reusable, 1100C Test Vehicle Test No. UCSS-2 47
6.2.1 Test No. UCSS-2 Design Details 47
6.2.2 Weather Conditions 55
6.2.3 Test Description 55
6.2.4 Sign Panel and U-Channel Support Damage 60
6.2.5 Surrogate, Reusable, 1100C Test Vehicle Damage 60
6.2.6 Occupant Risk 63
6.2.7 Discussion 64
6.3 Surrogate, Reusable, 1100C Test Vehicle Test No. UCSS-3 66
6.3.1 Test No. UCSS-3 Design Details 66
6.3.2 Weather Conditions 75
6.3.3 Test Description 75
6.3.4 Sign Panel and U-Channel Support Damage 80
6.3.5 Surrogate, Reusable, 1100C Test Vehicle Damage 80
6.3.6 Occupant Risk 83
6.3.7 Discussion 84
6.4 Surrogate, Reusable, 1100C Test Vehicle Test No. UCSS-4 86
6.4.1 Test Nos. UCSS-4 Design Details 86
6.4.2 Weather Conditions 95
6.4.3 Test Description 95
6.4.4 Sign Panel and U-Channel Support Damage 101
6.4.5 Surrogate, Reusable, 1100C Test Vehicle Damage 101
6.4.6 Occupant Risk 105
6.4.7 Discussion 106
6.5 Analysis of the Performance of Surrogate, Reusable, 1100C Test Vehicle 108

7 SURROGATE, REUSABLE, 1100C TEST VEHICLE TEST NO. UCSS-7 116
7.1 Weather Conditions 125
7.2 Test Description 125
7.3 Sign Panel and U-Channel Support Damage 131
7.4 Surrogate, Reusable, 1100C Test Vehicle Damage 131
7.5 Occupant Risk 134
7.6 Discussion 135

8 DIRECT EMBEDMENT 7-FT TALL 4-LB/FT U-CHANNEL SIGN INSTALLATION 137
8.1 Test Nos. UCSS-5 and UCSS-6 Design Details 137
8.2 Surrogate, Reusable, 1100C Test Vehicle Test No. UCSS-5 147
8.2.1 Weather Conditions 147
8.2.2 Test Description 147
8.2.3 Sign Panel and U-Channel Support Damage 153
8.2.4 Surrogate, Reusable, 1100C Test Vehicle Damage 153
8.2.5 Occupant Risk 159
8.2.6 Discussion 160
8.3 Surrogate, Reusable, 1100C Test Vehicle Test No. UCSS-6 162
8.3.1 Weather Conditions 162
8.3.2 Test Description 162
8.3.3 Sign Panel and U-Channel Support Damage 168

8.3.4 Surrogate, Reusable, 1100C Test Vehicle Damage 168
8.3.5 Occupant Risk 173
8.3.6 Discussion 174

9 LAP SPLICE 7-FT TALL 3-LB/FT U-CHANNEL SIGN INSTALLATION 176
9.1 Test No. UCSS-8 Design Details 176
9.2 Surrogate, Reusable, 1100C Test Vehicle Test No. UCSS-8 185
9.2.1 Weather Conditions 185
9.2.2 Test Description 185
9.2.3 Sign Panel and U-Channel Support Damage 191
9.2.4 Surrogate, Reusable, 1100C Test Vehicle Damage 191
9.2.5 Occupant Risk 195
9.2.6 Discussion 196

10 DIRECT EMBEDMENT 4-FT TALL 1.12-LB/FT U-CHANNEL DELINEATOR 198
10.1 Test No. UCSS-9 Design Details 198
10.2 Surrogate, Reusable, 1100C Test Vehicle Test No. UCSS-9 206
10.2.1 Weather Conditions 206
10.2.2 Test Description 206
10.2.3 Sign Panel and U-Channel Support Damage 212
10.2.4 Surrogate, Reusable, 1100C Test Vehicle Damage 212
10.2.5 Occupant Risk 214
10.2.6 Discussion 215

11 DIRECT EMBEDMENT 5-FT TALL 4-LB/FT U-CHANNEL SIGN INSTALLATION 217
11.1 Test No. UCSS-10 Design Details 217
11.2 Surrogate, Reusable, 1100C Test Vehicle Test No. UCSS-10 225
11.2.1 Weather Conditions 225
11.2.2 Test Description 225
11.2.3 Sign Panel and U-Channel Support Damage 231
11.2.4 Surrogate, Reusable, 1100C Test Vehicle Damage 231
11.2.5 Occupant Risk 237
11.2.6 Discussion 238

12 LAP SPLICE 7-FT TALL 4-LB/FT U-CHANNEL SIGN INSTALLATION 240
12.1 Test No. UCSS-11 Design Details 240
12.2 Surrogate, Reusable, 1100C Test Vehicle Test No. UCSS-11 249
12.2.1 Weather Conditions 249
12.2.2 Test Description 249
12.2.3 Sign Panel and U-Channel Support Damage 255
12.2.4 Surrogate, Reusable, 1100C Test Vehicle Damage 255
12.2.5 Occupant Risk 262
12.2.6 Discussion 263

13 DYNAMIC SIGN BEHAVIOR ANALYSIS 265
13.1 Mathematical Model Development 265
13.2 Model Calibration 269
13.2.1 Method 1 Calibration 269

13.2.2 Method 2 Calibration 271
13.3 MASH 2270P Sign Behavior Estimate 273
13.4 Conclusions and Recommendations 274

14 SUMMARY, CONCLUSIONS, AND RECOMMENDATIONS 276
14.1 Summary 276
14.2 Sign Support Stub Heights 284
14.3 Conclusions and Recommendations 288

15 REFERENCES 290

16 APPENDICES 292
Appendix A. Vehicle Center of Gravity Determination 293
Appendix B. Test No. UCSS-2 Material Specifications 295
Appendix C. Test No. UCSS-3 Material Specifications 303
Appendix D. Test No. UCSS-4 Material Specifications 313
Appendix E. Test No. UCSS-7 Material Specifications 323
Appendix F. Test No. UCSS-5 Material Specifications 334
Appendix G. Test No. UCSS-6 Material Specifications 343
Appendix H. Test No. UCSS-8 Material Specifications 352
Appendix I. Test No. UCSS-9 Material Specifications 363
Appendix J. Test No. UCSS-10 Material Specifications 371
Appendix K. Test No. UCSS-11 Material Specifications 380
Appendix L. Surrogate, Reusable, 1100C Test Vehicle Test Summaries 391

LIST OF FIGURES

Figure 1. Vehicle Dimensions, 2012 Kia Rio [7] 6
Figure 2. Angle and Stability Measurements, 2012 Kia Rio [7] 7
Figure 3. Kia Rio Crash Test Vehicle 7
Figure 4. Vehicle Dimensions, 2018 Dodge Ram 1500 Quad Cab [7].....8
Figure 5. Angle and Stability Measurements, 2018 Dodge Ram 1500 Quad Cab [7].....9
Figure 6. Dodge Ram Crash Test Vehicle 9
Figure 7. Scan and Geometry Measurements of 2012 Kia Rio 11
Figure 8. 3-D CAD of 2012 Kia Rio [8].....11
Figure 9. MwRSF Bogie Vehicle Nos. 1 through 4.....13
Figure 10. MwRSF Bogie Vehicle No. 5.....14
Figure 11. Design No. 1 Surrogate Vehicle Frame Iterations.....15
Figure 12. Suspension Chassis Frame Assembly, Surrogate Vehicle Design No. 2 17
Figure 13. Timbren Low-Profile Suspension Mount [10], Surrogate Vehicle Design No. 2 18
Figure 14. Surrogate, Reusable, 1100C Test Vehicle Bumper and Hood Modifications (a) before OEM Replacement and (b) after OEM Replacement 20
Figure 15. Surrogate, Reusable, 1100C Test Vehicle Windshield Modification (a) before OEM Replacement and (b) after OEM Replacement 21
Figure 16. Surrogate, Reusable, 1100C Test Vehicle Modifications to Undercarriage 22
Figure 17. Test Vehicle, Test Nos. UCSS-2 through UCSS-11 28
Figure 18. Pretest Test Vehicle's Undercarriage, Test Nos. UCSS-2 through UCSS-11.....29
Figure 19. Test Vehicle's Undercarriage, Test Nos. UCSS-2 through UCSS-11.....30
Figure 20. Vehicle Dimensions, Test Nos. UCSS-2 through UCSS-11 31
Figure 21. Target Geometry, Test Nos. UCSS-2 through UCSS-11 32
Figure 22. Camera Locations, Speeds, and Lens Settings, Test No. UCSS-2 35
Figure 23. Camera Locations, Speeds, and Lens Settings, Test No. UCSS-3 36
Figure 24. Camera Locations, Speeds, and Lens Settings, Test No. UCSS-4 37
Figure 25. Camera Locations, Speeds, and Lens Settings, Test No. UCSS-5 38
Figure 26. Camera Locations, Speeds, and Lens Settings, Test No. UCSS-6 39
Figure 27. Camera Locations, Speeds, and Lens Settings, Test No. UCSS-7 40
Figure 28. Camera Locations, Speeds, and Lens Settings, Test No. UCSS-8 41
Figure 29. Camera Locations, Speeds, and Lens Settings, Test No. UCSS-9 42
Figure 30. Camera Locations, Speeds, and Lens Settings, Test No. UCSS-10 43
Figure 31. Camera Locations, Speeds, and Lens Settings, Test No. UCSS-11 44
Figure 32. Test Installation Layout, Test No. UCSS-2.....48
Figure 33. Sign Post Assembly, Test No. UCSS-2.....49
Figure 34. U-Channel Detail, Test No. UCSS-2.....50
Figure 35. Sign Panel Detail, Test No. UCSS-2.....51
Figure 36. Hardware, Test No. UCSS-2 52
Figure 37. Bill of Materials, Test No. UCSS-2.....53
Figure 38. Sign Installation, Test No. UCSS-2.....54
Figure 39. Impact Location, Test No. UCSS-2.....56
Figure 40. Documentary Photographs, Test No. UCSS-2 58
Figure 41. Additional Documentary Photographs, Test No. UCSS-2 59
Figure 42. Sign Installation Damage, Test No. UCSS-2 61
Figure 43. Vehicle Damage, Test No. UCSS-2 62

Figure 44. Summary of Representative MASH Test Results and Sequential Photographs, Test No. UCSS-2 65
Figure 45. Test Installation Layout, Test No. UCSS-3 67
Figure 46. Sign Post Assembly, Test No. UCSS-3 68
Figure 47. Sign Assembly Details, Test No. UCSS-3 69
Figure 48. U-Channel Detail, Test No. UCSS-3 70
Figure 49. Sign Panel Detail, Test No. UCSS-3 71
Figure 50. Hardware, Test No. UCSS-3 72
Figure 51. Bill of Materials, Test No. UCSS-3 73
Figure 52. Sign Installation, Test No. UCSS-3 74
Figure 53. Impact Location, Test No. UCSS-3 76
Figure 54. Additional Sequential Photographs, Test No. UCSS-3 78
Figure 55. Documentary Photographs, Test No. UCSS-3 79
Figure 56. Sign Installation Damage, Test No. UCSS-3 81
Figure 57. Vehicle Damage, Test No. UCSS-3 82
Figure 58. Summary of Representative MASH Test Results and Sequential Photographs, Test No. UCSS-3 85
Figure 59. Test Installation Layout, Test No. UCSS-4 87
Figure 60. Sign Post Assembly, Test No. UCSS-4 88
Figure 61. Sign Assembly Details, Test No. UCSS-4 89
Figure 62. U-Channel Detail, Test No. UCSS-4 90
Figure 63. Sign Panel Detail, Test No. UCSS-4 91
Figure 64. Hardware, Test No. UCSS-4 92
Figure 65. Bill of Materials, Test No. UCSS-4 93
Figure 66. Sign Installation, Test No. UCSS-4 94
Figure 67. Impact Location, Test No. UCSS-4 96
Figure 68. Additional Sequential Photographs, Test No. UCSS-4 98
Figure 69. Documentary Photographs, Test No. UCSS-4 99
Figure 70. Additional Documentary Photographs, Test No. UCSS-4 100
Figure 71. Sign Installation Damage, Test No. UCSS-4 102
Figure 72. Vehicle Damage, Test No. UCSS-4 103
Figure 73. Vehicle Roof Damage, Test No. UCSS-4 104
Figure 74. Vehicle Roof Deformation, Test No. UCSS-4 (units = m), Maximum Deformation = 1.8 in. 105
Figure 75. Fractured and Overriden Portion of Post during Test No. UCSS-4 105
Figure 76. Summary of Representative MASH Test Results and Sequential Photographs, Test No. UCSS-4 107
Figure 77. Sequential Image Comparison of Test Nos. UCSS-2 (left) and UCSS-1a (right) 109
Figure 78. System Damage Comparison (a) UCSS-2 (b) UCSS-1a 110
Figure 79. Sequential Image Comparison of Test Nos. UCSS-3 (left) and UCSS-1b (right) 111
Figure 80. System Damage Comparison (a) UCSS-3 (b) UCSS-1b 112
Figure 81. Sequential Image Comparison of Test Nos. UCSS-4 (left) and UCSS-1c (right) 113
Figure 82. System Damage Comparison (a) UCSS-4 (b) UCSS-1c 114
Figure 83. Test Installation Layout, Test No. UCSS-7 117
Figure 84. Sign Post Assembly, Test No. UCSS-7 118
Figure 85. Sign Assembly Details, Test No. UCSS-7 119
Figure 86. U-Channel Detail, Test No. UCSS-7 120

Figure 87. Sign Panel Detail, Test No. UCSS-7 121
Figure 88. Hardware, Test No. UCSS-7 122
Figure 89. Bill of Materials, Test No. UCSS-7....123
Figure 90. Sign Installation, Test No. UCSS-7....124
Figure 91. Impact Location, Test No. UCSS-7....126
Figure 92. Additional Sequential Photographs, Test No. UCSS-7 128
Figure 93. Documentary Photographs, Test No. UCSS-7 129
Figure 94. Additional Documentary Photographs, Test No. UCSS-7 130
Figure 95. Sign Installation Damage, Test No. UCSS-7 132
Figure 96. Vehicle Damage, Test No. UCSS-7 133
Figure 97. Vehicle Windshield Deformation, Test No. UCSS-7 (units = m), Maximum Deformation = 2.3 in. 134
Figure 98. Summary of Representative MASH Test Results and Sequential Photographs, Test No. UCSS-7 136
Figure 99. Test Installation Layout, Test No. UCSS-5....138
Figure 100. Test Installation Layout, Test No. UCSS-6....139
Figure 101. Sign Post Assembly, Test Nos. UCSS-5 and UCSS-6 140
Figure 102. U-Channel Detail, Test Nos. UCSS-5 and UCSS-6 141
Figure 103. Sign Panel Detail, Test Nos. UCSS-5 and UCSS-6 142
Figure 104. Hardware, Test Nos. UCSS-5 and UCSS-6....143
Figure 105. Bill of Materials, Test Nos. UCSS-5 and UCSS-6 144
Figure 106. Sign Installation, Test No. UCSS-5....145
Figure 107. Sign Installation, Test No. UCSS-6....146
Figure 108. Impact Location, Test No. UCSS-5....148
Figure 109. Additional Sequential Photographs, Test No. UCSS-5 150
Figure 110. Documentary Photographs, Test No. UCSS-5 151
Figure 111. Additional Documentary Photographs, Test No. UCSS-5 152
Figure 112. Sign Installation Damage, Test No. UCSS-5 154
Figure 113. U-Channel Fractures, Test No. UCSS-5....155
Figure 114. Vehicle Damage, Test No. UCSS-5 156
Figure 115. Vehicle Windshield Deformation, Test No. UCSS-5 (units = m), Maximum Deformation = 2.8 in. 157
Figure 116. Vehicle Undercarriage Damage, Test No. UCSS-5 158
Figure 117. Summary of Representative MASH Test Results and Sequential Photographs, Test No. UCSS-5 161
Figure 118. Impact Location, Test No. UCSS-6....163
Figure 119. Additional Sequential Photographs, Test No. UCSS-6 165
Figure 120. Documentary Photographs, Test No. UCSS-6 166
Figure 121. Additional Documentary Photographs, Test No. UCSS-6 167
Figure 122. U-Channel Fractures, Test No. UCSS-6....169
Figure 123. Sign Installation Damage, Test No. UCSS-6 170
Figure 124. Vehicle Damage, Test No. UCSS-6 171
Figure 125. Vehicle Roof Deformation, Test No. UCSS-6 (units = m), Maximum Deformation = 3.8 in. 172
Figure 126. Summary of Representative MASH Test Results and Sequential Photographs, Test No. UCSS-6 175
Figure 127. Test Installation Layout, Test No. UCSS-8....177

Figure 128. Sign Post Assembly, Test No. UCSS-8 178
Figure 129. Sign Assembly Details, Test No. UCSS-8 179
Figure 130. U-Channel Detail, Test No. UCSS-8 180
Figure 131. Sign Panel Detail, Test No. UCSS-8 181
Figure 132. Hardware, Test No. UCSS-8 182
Figure 133. Bill of Materials, Test No. UCSS-8 183
Figure 134. Sign Installation, Test No. UCSS-8 184
Figure 135. Impact Location, Test No. UCSS-8 186
Figure 136. Additional Sequential Photographs, Test No. UCSS-8 188
Figure 137. Documentary Photographs, Test No. UCSS-8 189
Figure 138. Additional Documentary Photographs, Test No. UCSS-8 190
Figure 139. Sign Installation Damage, Test No. UCSS-8 192
Figure 140. Vehicle Damage, Test No. UCSS-8 193
Figure 141. Test Article Direct Contact with Rear Window, Test No. UCSS-8 194
Figure 142. Fractured and Overriden Portion of Post During Test No. UCSS-8 195
Figure 143. Summary of Representative MASH Test Results and Sequential Photographs, Test No. UCSS-8 197
Figure 144. Test Installation Layout, Test No. UCSS-9 199
Figure 145. Sign Post Assembly, Test No. UCSS-9 200
Figure 146. U-Channel Detail, Test No. UCSS-9 201
Figure 147. Sign Panel Detail, Test No. UCSS-9 202
Figure 148. Hardware, Test No. UCSS-9 203
Figure 149. Bill of Materials, Test No. UCSS-9 204
Figure 150. Sign Installation, Test No. UCSS-9 205
Figure 151. Impact Location, Test No. UCSS-9 207
Figure 152. Additional Sequential Photographs, Test No. UCSS-9 209
Figure 153. Documentary Photographs, Test No. UCSS-9 210
Figure 154. Additional Documentary Photographs, Test No. UCSS-9 211
Figure 155. Sign Installation Damage, Test No. UCSS-9 213
Figure 156. Vehicle Damage, Test No. UCSS-9 214
Figure 157. Summary of Representative MASH Test Results and Sequential Photographs, Test No. UCSS-9 216
Figure 158. Test Installation Layout, Test No. UCSS-10 218
Figure 159. Sign Post Assembly, Test No. UCSS-10 219
Figure 160. U-Channel Detail, Test No. UCSS-10 220
Figure 161. Sign Panel Detail, Test No. UCSS-10 221
Figure 162. Hardware, Test No. UCSS-10 222
Figure 163. Bill of Materials, Test No. UCSS-10 223
Figure 164. Sign Installation, Test No. UCSS-10 224
Figure 165. Impact Location, Test No. UCSS-10 226
Figure 166. Additional Sequential Photographs, Test No. UCSS-10 228
Figure 167. Documentary Photographs, Test No. UCSS-10 229
Figure 168. Additional Documentary Photographs, Test No. UCSS-10 230
Figure 169. Sign Installation Damage, Test No. UCSS-10 232
Figure 170. U-Channel Fractures, Test No. UCSS-10 233
Figure 171. Vehicle Damage, Test No. UCSS-10 234
Figure 172. Vehicle Windshield and Roof Damage, Test No. UCSS-10 235

Figure 173. Vehicle Roof Deformation, Test No. UCSS-10 (units = m), Maximum Deformation = 2.9 in. 236
Figure 174. Summary of Representative MASH Test Results and Sequential Photographs, Test No. UCSS-10 239
Figure 175. Test Installation Layout, Test No. UCSS-11 241
Figure 176. Sign Post Assembly, Test No. UCSS-11 242
Figure 177. Sign Assembly Details, Test No. UCSS-11 243
Figure 178. U-Channel Detail, Test No. UCSS-11 244
Figure 179. Sign Panel Detail, Test No. UCSS-11 245
Figure 180. Hardware, Test No. UCSS-11 246
Figure 181. Bill of Materials, Test No. UCSS-11 247
Figure 182. Sign Installation, Test No. UCSS-11 248
Figure 183. Impact Location, Test No. UCSS-11 250
Figure 184. Additional Sequential Photographs, Test No. UCSS-11 252
Figure 185. Documentary Photographs, Test No. UCSS-11 253
Figure 186. Additional Documentary Photographs, Test No. UCSS-11 254
Figure 187. Sign Installation Damage, Test No. UCSS-11 256
Figure 188. Anchor Stub and Soil Damage, Test No. UCSS-11 257
Figure 189. Vehicle Damage, Test No. UCSS-11 258
Figure 190. Vehicle Roof Damage, Test No. UCSS-11 259
Figure 191. Vehicle Roof Deformation, Test No. UCSS-11 (units = m), Maximum Deformation = 3.3 in. 260
Figure 192. Test Article Penetration into Rear Window, Test No. UCSS-11 261
Figure 193. Fractured and Overriden Portion of Post During Test No. UCSS-11 262
Figure 194. Summary of Representative MASH Test Results and Sequential Photographs, Test No. UCSS-11 264
Figure 195. Single, U-Channel Sign Support Installation Diagram 266
Figure 196. Sign Support Kinematics after Fracture (Method 1) 267
Figure 197. Sign Support Orientation at Fracture (Method 2) 271
Figure 198. 18-in. Stub Height for Test No. UCSS-2 285
Figure 199. 4-in. Stub Height for Test No. UCSS-3 (typical for all lap splice systems) 285
Figure 200. 15-in. Stub Height for Test No. UCSS-5 286
Figure 201. 10-in. Stub Height for Test No. UCSS-6 286
Figure 202. 0-in. Stub Height for Test No. UCSS-9 287
Figure 203. 11-in. Stub Height for Test No. UCSS-10 287
Figure A-1. Vehicle Mass Distribution for Surrogate, Reusable, 1100C Test Vehicle 294
Figure B-1. 1.12 lb/ft U-Channel Sign Post, 96 in. Long, Test No. UCSS-2 297
Figure B-2. 36-in. x 12-in. x 0.08-in. Sign with Reflective Sheeting, Test No. UCSS-2 298
Figure B-3. $^{5}/_{16}$-in., 1¾-in. Long Hex Bolt, Test No. UCSS-2 299
Figure B-4. $^{5}/_{16}$-in. Heavy Hex Nut, Test No. UCSS-2 300
Figure B-5. ⅜-in. Dia. Lock Washer, Test No. UCSS-2 301
Figure B-6. $^{5}/_{16}$-in. Dia. Plain Round Washer, Test No. UCSS-2 302
Figure C-1. 4.00 lb/ft U-Channel Sign Post, Test No. UCSS-3 305
Figure C-2. 36-in. x 36-in. x 0.08-in. Sign with Reflective Sheeting, Test No. UCSS-3 306
Figure C-3. $^{5}/_{16}$-in., 2¾-in. Long Hex Bolt, Test No. UCSS-3 307
Figure C-4. $^{5}/_{16}$-in., 2¼-in. Long Hex Bolt, Test No. UCSS-3 308
Figure C-5. $^{5}/_{16}$-in. Heavy Hex Nut, Test No. UCSS-3 309

Figure C-6. ⅜-in. Dia. Lock Washer, Test No. UCSS-3 310
Figure C-7. 5/16-in. Dia. Plain Round Washer, Test No. UCSS-3 311
Figure C-8. 1-in. x ⅝-in. Post Spacer, Test No. UCSS-3 312
Figure D-1. 4.00 lb/ft U-Channel Sign Post, Test No. UCSS-4 315
Figure D-2. 36-in. x 36-in. x 0.08-in. Sign with Reflective Sheeting, Test No. UCSS-4 316
Figure D-3. 5/16-in., 2¾-in. Long Hex Bolt, Test No. UCSS-4 317
Figure D-4. 5/16-in., 2¼-in. Long Hex Bolt, Test No. UCSS-4 318
Figure D-5. 5/16-in. Heavy Hex Nut, Test No. UCSS-4 319
Figure D-6. ⅜-in. Dia. Lock Washer, Test No. UCSS-4 320
Figure D-7. 5/16-in. Dia. Plain Round Washer, Test No. UCSS-4 321
Figure D-8. 1-in. x ⅝-in. Post Spacer, Test No. UCSS-4 322
Figure E-1. 4.00 lb/ft U-Channel Sign Post, Test No. UCSS-7 325
Figure E-2. 4.00 lb/ft U-Channel Sign Post, Test No. UCSS-7 326
Figure E-3. 36-in. x 36-in. x 0.08-in. Sign with Reflective Sheeting, Test No. UCSS-7 327
Figure E-4. 5/16-in., 2¾-in. Long Hex Bolt, Test No. UCSS-7 328
Figure E-5. 5/16-in., 2¼-in. Long Hex Bolt, Test No. UCSS-7 329
Figure E-6. 5/16-in. Heavy Hex Nut, Test No. UCSS-7 330
Figure E-7. 5/16-in. Dia. Plain Round Washer, Test No. UCSS-7 331
Figure E-8. ⅜-in. Dia. Lock Washer, Test No. UCSS-7 332
Figure E-9. ¾-in. x ½-in. Post Spacer, Test No. UCSS-7 333
Figure F-1. 4.00 lb/ft U-Channel Sign Post, Test No. UCSS-5 336
Figure F-2. 4.00 lb/ft U-Channel Sign Post, Test No. UCSS-5 337
Figure F-3. 36-in. x 36-in. x 0.08-in. Sign with Reflective Sheeting, Test No. UCSS-5 338
Figure F-4. 5/16-in., 2¾-in. Long Hex Bolt, Test No. UCSS-5 339
Figure F-5. 5/16-in. Heavy Hex Nut, Test No. UCSS-5 340
Figure F-6. ⅜-in. Dia. Lock Washer, Test No. UCSS-5 341
Figure F-7. 5/16-in. Dia. Plain Round Washer, Test No. UCSS-5 342
Figure G-1. 4.00 lb/ft U-Channel Sign Post, Test No. UCSS-6 345
Figure G-2. 4.00 lb/ft U-Channel Sign Post, Test No. UCSS-6 346
Figure G-3. 36-in. x 36-in. x 0.08-in. Sign with Reflective Sheeting, Test No. UCSS-6 347
Figure G-4. 5/16-in. -18, 2¾-in. Long Hex Bolt, Test No. UCSS-6 348
Figure G-5. 5/16-in. Heavy Hex Nut, Test No. UCSS-6 349
Figure G-6. ⅜-in. Dia. Lock Washer, Test No. UCSS-6 350
Figure G-7. 5/16-in. Dia. Plain Round Washer, Test No. UCSS-6 351
Figure H-1. 3.00 lb/ft U-Channel Sign Post, Test No. UCSS-8 354
Figure H-2. 3.00 lb/ft U-Channel Sign Post, Test No. UCSS-8 355
Figure H-3. 36-in. x 36-in. x 0.08-in. Sign with Reflective Sheeting, Test No. UCSS-8 356
Figure H-4. 5/16-in., 2¾-in. Long Hex Bolt, Test No. UCSS-8 357
Figure H-5. 5/16-in., 2¼-in. Long Hex Bolt, Test No. UCSS-8 358
Figure H-6. 5/16-in. Heavy Hex Nut, Test No. UCSS-8 359
Figure H-7. ⅜-in. Dia. Lock Washer, Test No. UCSS-8 360
Figure H-8. 5/16-in. Dia. Plain Round Washer, Test No. UCSS-8 361
Figure H-9. ¾-in. x ½-in. Post Spacer, Test No. UCSS-8 362
Figure I-1. 1.12 lb/ft U-Channel Sign Post, 78-in. Long, Test No. UCSS-9 365
Figure I-2. 3-in. x 6-in. x 0.08-in. Reflective Delineator, Test No. UCSS-9 366
Figure I-3. 5/16-in., 1-in. Long Machine Screw, Test No. UCSS-9 367
Figure I-4. 5/16-in., 1-in. Long Machine Screw, Test No. UCSS-9 368

Figure I-5. 5/16-in. Dia. Plain Round Washer, Test No. UCSS-9 369
Figure I-6. 5/16-in. Lock Nut, Test No. UCSS-9 370
Figure J-1. 4.00 lb/ft U-Channel Sign Post, Test No. UCSS-10 373
Figure J-2. 4.00 lb/ft U-Channel Sign Post, Test No. UCSS-10 374
Figure J-3. 36-in. x 36-in. x 0.08-in. Sign with Reflective Sheeting, Test No. UCSS-10 375
Figure J-4. 5/16-in., 2¾-in. Long Hex Bolt, Test No. UCSS-10 376
Figure J-5. 5/16-in. Heavy Hex Nut, Test No. UCSS-10 377
Figure J-6. ⅜-in. Dia. Lock Washer, Test No. UCSS-10 378
Figure J-7. 5/16-in. Dia. Plain Round Washer, Test No. UCSS-10 379
Figure K-1. 4.00 lb/ft U-Channel Sign Post, Test No. UCSS-11 382
Figure K-2. 4.00 lb/ft U-Channel Sign Post, Test No. UCSS-11 383
Figure K-3. 36-in. x 36-in. x 0.08-in. Sign with Reflective Sheeting, Test No. UCSS-11 384
Figure K-4. 5/16-in., 2¾-in. Long Hex Bolt, Test No. UCSS-11 385
Figure K-5. 5/16-in., 2¼-in. Long Hex Bolt, Test No. UCSS-11 386
Figure K-6. 5/16-in. Heavy Hex Nut, Test No. UCSS-11 387
Figure K-7. ⅜-in. Dia. Lock Washer, Test No. UCSS-11 388
Figure K-8. 5/16-in. Dia. Plain Round Washer, Test No. UCSS-11 389
Figure K-9. ¾-in. x ½-in. Post Spacer, Test No. UCSS-11 390
Figure L-1. Surrogate, Reusable, 1100C Vehicle Test Summary, Test No. UCSS-2 (SLICE-1) 392
Figure L-2. Surrogate, Reusable, 1100C Vehicle Test Summary, Test No. UCSS-2 (SLICE-2) 393
Figure L-3. Surrogate, Reusable, 1100C Vehicle Test Summary, Test No. UCSS-3 (SLICE-1) 394
Figure L-4. Surrogate, Reusable, 1100C Vehicle Test Summary, Test No. UCSS-3 (SLICE-2) 395
Figure L-5. Surrogate, Reusable, 1100C Vehicle Test Summary, Test No. UCSS-4 (SLICE-1) 396
Figure L-6. Surrogate, Reusable, 1100C Vehicle Test Summary, Test No. UCSS-4 (SLICE-2) 397
Figure L-7. Surrogate, Reusable, 1100C Vehicle Test Summary, Test No. UCSS-5 (SLICE-1) 398
Figure L-8. Surrogate, Reusable, 1100C Vehicle Test Summary, Test No. UCSS-5 (SLICE-2) 399
Figure L-9. Surrogate, Reusable, 1100C Vehicle Test Summary, Test No. UCSS-6 (SLICE-1) 400
Figure L-10. Surrogate, Reusable, 1100C Vehicle Test Summary, Test No. UCSS-6 (SLICE-2) 401
Figure L-11. Surrogate, Reusable, 1100C Vehicle Test Summary, Test No. UCSS-7 (SLICE-1) 402
Figure L-12. Surrogate, Reusable, 1100C Vehicle Test Summary, Test No. UCSS-7 (SLICE-2) 403
Figure L-13. Surrogate, Reusable, 1100C Vehicle Test Summary, Test No. UCSS-8 (SLICE-1) 404
Figure L-14. Surrogate, Reusable, 1100C Vehicle Test Summary, Test No. UCSS-8 (SLICE-2) 405

Figure L-15. Surrogate, Reusable, 1100C Vehicle Test Summary, Test No. UCSS-9 (SLICE-1) 406
Figure L-16. Surrogate, Reusable, 1100C Vehicle Test Summary, Test No. UCSS-9 (SLICE-2) 407
Figure L-17. Surrogate, Reusable, 1100C Vehicle Test Summary, Test No. UCSS-10 (SLICE-1) 408
Figure L-18. Surrogate, Reusable, 1100C Vehicle Test Summary, Test No. UCSS-10 (SLICE-2) 409
Figure L-19. Surrogate, Reusable, 1100C Vehicle Test Summary, Test No. UCSS-11 (SLICE-1) 410
Figure L-20. Surrogate, Reusable, 1100C Vehicle Test Summary, Test No. UCSS-11 (SLICE-2) 411

LIST OF TABLES

Table 1. Sign Systems Prioritized for Testing 4
Table 2. MASH 2016 TL-3 Crash Test Conditions for Support Structures 23
Table 3. MASH 2016 Evaluation Criteria for Support Structures 25
Table 4. Summary of Breakaway Sign Supports for Validation Comparison 46
Table 5. Weather Conditions, Test No. UCSS-2 55
Table 6. Sequential Description of Impact Events, Test No. UCSS-2 57
Table 7. Summary of OIV, ORA, THIV, PHD, and ASI Values, Test No. UCSS-2 64
Table 8. Weather Conditions, Test No. UCSS-3 75
Table 9. Sequential Description of Impact Events, Test No. UCSS-3 77
Table 10. Summary of OIV, ORA, THIV, PHD, and ASI Values, Test No. UCSS-3 84
Table 11. Weather Conditions, Test No. UCSS-4 95
Table 12. Sequential Description of Impact Events, Test No. UCSS-4 97
Table 13. Summary of OIV, ORA, THIV, PHD, and ASI Values, Test No. UCSS-4 106
Table 14. Comparison of Fractured Sign Rotation: UCSS-4 and UCSS-1c 115
Table 15. Weather Conditions, Test No. UCSS-7 125
Table 16. Sequential Description of Impact Events, Test No. UCSS-7 127
Table 17. Summary of OIV, ORA, THIV, PHD, and ASI Values, Test No. UCSS-7 135
Table 18. Weather Conditions, Test No. UCSS-5 147
Table 19. Sequential Description of Impact Events, Test No. UCSS-5 149
Table 20. Summary of OIV, ORA, THIV, PHD, and ASI Values, Test No. UCSS-5 160
Table 21. Weather Conditions, Test No. UCSS-6 162
Table 22. Sequential Description of Impact Events, Test No. UCSS-6 164
Table 24. Weather Conditions, Test No. UCSS-8 185
Table 25. Sequential Description of Impact Events, Test No. UCSS-8 187
Table 26. Summary of OIV, ORA, THIV, PHD, and ASI Values, Test No. UCSS-8 196
Table 27. Weather Conditions, Test No. UCSS-9 206
Table 28. Sequential Description of Impact Events, Test No. UCSS-9 208
Table 29. Summary of OIV, ORA, THIV, PHD, and ASI Values, Test No. UCSS-9 215
Table 30. Weather Conditions, Test No. UCSS-10 225
Table 31. Sequential Description of Impact Events, Test No. UCSS-10 227
Table 32. Summary of OIV, ORA, THIV, PHD, and ASI Values, Test No. UCSS-10 237
Table 33. Weather Conditions, Test No. UCSS-11 249
Table 34. Sequential Description of Impact Events, Test No. UCSS-11 251
Table 35. Summary of OIV, ORA, THIV, PHD, and ASI Values, Test No. UCSS-11 263
Table 36. Method 1 Tuned COR and Correction Factors 270
Table 37. Method 1 – Comparison of Empirical and Model-Predicted Angular Velocities 270
Table 38. Method 1 – Comparison of Empirical and Model-Predicted Roof Contact Locations 270
Table 39. Method 2 Calculated COR and H_o 272
Table 40. Method 2 Angular Velocity with Average COR and H_o 272
Table 41. Method 2 Secondary Impact Location with Average COR and H_o 273
Table 42. MASH 2270P 5-ft Tall Sign Behavior Estimate 274
Table 43. MASH 2270P 7-ft Tall Sign Behavior Estimate 274
Table 44. Testing Summary 277
Table 45. Summary of Safety Performance Evaluation, Test Nos. UCSS-2 through UCSS-4 280

Table 46. Summary of Safety Performance Evaluation, Test Nos. UCSS-5 through UCSS-7 ...281
Table 47. Summary of Safety Performance Evaluation, Test Nos. UCSS-8 through UCSS-10 282
Table 48. Summary of Safety Performance Evaluation, Test No. UCSS-11 283
Table 49. Summary of Stub Heights, Test Nos. UCSS-2 through UCSS-11 284
Table B-1. Bill of Materials, Test No. UCSS-2 296
Table C-1. Bill of Materials, Test No. UCSS-3 304
Table D-1. Bill of Materials, Test No. UCSS-4 314
Table E-1. Bill of Materials, Test No. UCSS-7 324
Table F-1. Bill of Materials, Test No. UCSS-5 335
Table G-1. Bill of Materials, Test No. UCSS-6 344
Table H-1. Bill of Materials, Test No. UCSS-8 353
Table I-1. Bill of Materials, Test No. UCSS-9 364
Table J-1. Bill of Materials, Test No. UCSS-10 372
Table K-1. Bill of Materials, Test No. UCSS-11 381

1 INTRODUCTION

1.1 Background

Single-post, U-channel sign supports are used by many agencies for a variety of small signs and delineators, including mile delineators and object markers. These signs are generally mounted between 4 ft and 7 ft above the ground and placed in close proximity to the roadway. Despite the wide use of U-channel sign supports, their crashworthiness has not been fully evaluated to the current safety criteria found in the American Association of State Highway and Transportation Officials' (AASHTO's) *Manual for Assessing Safety Hardware, Second Edition* (MASH 2016) [1]. MASH implementation dates established by the Federal Highway Administration (FHWA) and AASHTO indicate a strong need for evaluating the crashworthiness of single, U-channel, sign supports according to MASH 2016 Test Level 3 (TL-3) safety criteria.

Numerous studies and full-scale crash tests have been conducted on U-channel sign supports over the past four decades. These tests may help identify critical configurations for evaluation prior to MASH testing. However, several of these projects were conducted under previous evaluation criteria, such as AASHTO's Standard Specifications for Structural Supports for Highway Signs, Luminaries, and Traffic Signals [2], the National Cooperative Highway Research Program (NCHRP) Report No. 230 [3], and NCHRP Report No. 350 [4]. U-channel sign supports have not been tested to the full testing matrix required by MASH 2016. NCHRP Project No. 03-119 [5] is currently evaluating luminaire poles, sign supports, and work-zone traffic control devices to MASH 2016 standards, but U-channel supports will only be partially evaluated.

1.2 Objective

The objective of this research project was to evaluate the crashworthiness of various breakaway sign systems mounted on single U-channel sign supports in accordance with impact conditions consistent with TL-3 criteria of MASH 2016. The evaluated breakaway sign support systems were identified as critical during the Phase Ia report based on sign panel mounting height, sign panel size, post weight, post material properties, and post splice configuration [6]. Additionally, a surrogate, reusable, 1100C test vehicle was developed and validated, which replicated the stiffness, dynamics, and geometry of a MASH 1100C small car test vehicle to evaluate the crashworthiness of the various breakaway sign systems. Concepts for developing a 2270P surrogate test vehicle were explored, but only testing with the surrogate, reusable, 1100C test vehicle was completed due to cost and time constraints.

1.3 Scope

The research objectives were achieved by performing several tasks. First, multiple breakaway sign systems mounted on single U-channel sign supports were identified for evaluation based on literature review and sponsor survey results, as detailed in the Phase Ia report [6]. The systems were identified as critical for testing based on sign panel mounting height, sign panel size, post weight, post material properties, and post splice configuration.

Next, inertial properties of typical MASH 1100C small car test vehicles were tabulated and used to identify potential concepts for a surrogate, reusable, 1100C test vehicle. Construction details, cost analysis, and methods of verifying the results were investigated. The preferred

candidate for the surrogate, reusable, 1100C test vehicle was a 2012 Kia Rio, modified by installing remote-controlled brake and electrical equipment adjacent to the fuel line in the undercarriage and welding a plate to protect against contact damage, and modifying the attachments for the front bumper cartridge, bumper cover, headlights, hood, and windshield. Panels, which replicated stock roof hardware, were purchased. Procedures for removing damaged roof panels were developed to repair the roof of the surrogate, reusable, 1100C test vehicle, if deemed necessary. Additional procedures were developed for documenting vehicle damage and comparing it to the baseline stock condition and pristine repaired condition, using a combination of LIDAR, photogrammetry, and single point mapping.

The surrogate, reusable, 1100C test vehicle was validated against full-scale crash test results by conducting component tests with the same test article configuration and similar impact conditions as test nos. UCSS-1a, UCSS-1b, and UCSS-1c [6]. The behavior of the sign support, fracture location, roof contact, and vehicle damage in test nos. UCSS-2, UCSS-3, and UCSS-4 were compared to results obtained from test nos. UCSS-1a, UCSS-1b, and UCSS-1c, respectively. Through comparisons between the surrogate vehicle and full-scale tests, the surrogate, reusable, 1100C test vehicle was determined to be a valid representation of the MASH 1100C small car during sign support impacts.

Next, a series of seven sign support tests were conducted using the validated surrogate, reusable, 1100C test vehicle with repairs. For each test, the trajectory of the sign, the damage to the surrogate, reusable, 1100C test vehicle, and the MASH full-scale test evaluation criteria were used to determine the potential performance of the sign support system during impact events. The tests were conducted according to MASH test designation no. 3-60, with a 0-degree impact angle and 19-mph impact speed, and MASH test designation no. 3-61, with a 0-degree impact angle and 62-mph impact speed. Data were collected and results were analyzed, documented, and reported.

2 IDENTIFICATION OF SIGN SUPPORT INSTALLATIONS FOR ANALYSIS

2.1 Summary of Phase 1a

To determine critical sign configurations for analysis, a literature review was performed in which reports, photographs, and video footage of previous testing were reviewed, as detailed in the Phase Ia report [6]. Researchers at MwRSF subjectively graded each of the reviewed tests/installations in regards to meeting the MASH 2016 safety performance criteria on a scale of one (very unlikely to pass) to five (very likely to pass).

Results from this grading indicated that installations with a higher chance of meeting the MASH 2016 criteria generally had higher minimum steel yield strengths. Additionally, it was stated that a panel mounting height of 5 ft or less above the ground and a smaller post weight was associated with a lower chance of passing MASH 2016 test designation no. 3-60 than the system with a panel mounting height of 7 ft and a heavier post.

In addition to the literature review, a survey of the Midwest Pooled Fund Program member states was conducted to gain a full understanding of current U-channel sign support usage [6]. A total of fourteen states responded to the survey, and the results were used to determine which sign support configurations were desired by state transportation departments.

All fourteen states indicated usage of U-channel sign supports for small delineators with sign panels. Generally, 1.12-lb/ft and 2-lb/ft weight U-channel sign supports are used for small delineator applications. The mounting height from the ground to the base of the sign panel was typically 4 ft for small delineators, while many different sign panel sizes are used. Some states did not attach sign panels and instead only attached a reflective marker at the top of the sign support.

Nine states indicated that U-channel sign supports were used for a purpose other than small delineators, but the specifications for each application varied widely with each response. These variations included both U-channel weight and sign panel size. While some responses indicated that U-channel sign supports are installed in concrete, all responses indicated that U-channel sign supports are mounted in soil.

Based on the results of the literature review and sponsor survey, several systems were identified as a priority for evaluation during the project, as shown in Table 1.

Table 1. Sign Systems Prioritized for Testing

Post Weight, lb/ft	Sign Panel Size	Lower Panel Height, ft	Post Yield Strength, ksi	Splice Configuration
1.12	Reflector only	4	60	None
1.12	8 in. x 2 ft x 0.08 in.	4	60	None
3	3 ft x 3 ft x 0.1 in.	7	60	8-in. overlap at ground line
4	3 ft x 3 ft x 0.1 in.	7	80+	None
4	3 ft x 3 ft x 0.1 in.	7	60	8-in. overlap at ground line
4	3 ft x 3 ft x 0.1 in.	5	60	8-in. overlap at ground line

2.2 Sign Panel Modifications

The Phase 1a survey was intended to identify common, critical combinations of sign panels and breakaway sign supports to prioritize evaluation with MASH full-scale crash testing. It was recommended that for 3 lb/ft and 4 lb/ft sign supports, a 0.10-in. thick, extruded aluminum sign panel be evaluated for testing. However, most states which provided responses in the survey indicated a use of the thinner 0.08-in. thick extruded aluminum sign panel, and the availability of the 0.10-in. thick panel was severely limited prior to and throughout the testing period for this research effort. Based on current guidance provided by the Federal Highway Administration (FHWA), it is anticipated that sign supports which are evaluated with one sign panel thickness will not receive eligibility letters when installed in combination with alternative sign panel thicknesses. Therefore, in response to the limited availability and increased number of state DOTs which utilize 0.08-in. thick extruded panels, MwRSF used only 0.08-in. thick extruded aluminum panels for this exploratory research effort. As a result, test results isolated the performance of the sign support behavior during fracture and were not dependent on sign panel thickness. Future testing and simulation are recommended to evaluate the effects of increased sign panel thickness as well as sign support features, such as lights, additional cross-braces, or multiple concurrent sign panels, on the crashworthiness and impact behavior of the single, U-channel, breakaway sign supports.

3 SURROGATE, REUSABLE, 1100C TEST VEHICLE DEVELOPMENT

3.1 Motivation

Full-scale crash testing of roadside safety hardware can be expensive. For MASH-compliant breakaway devices, including sign supports, the change in the test vehicle speed is typically very low, and damage to the test vehicle is typically limited to a small number of locations on the vehicle. However, the damage to the test vehicle's hood, front and rear windshield, roof, and front bumper can render the vehicle unusable for subsequent tests. MASH prohibits test vehicle use if the vehicle has suffered structural damage to these components where they cannot be repaired or replaced using original equipment manufacturer (OEM) parts. Thus, it was desired to develop a new surrogate test vehicle for the evaluation of roadside safety hardware that was expected to cause limited vehicle damage (i.e., no plastic deformation of components) that could be replaced. The surrogate test vehicle should have similar dynamic, stiffness, and geometrical properties as provided by MASH passenger vehicles, and have the ability to repair or replace damaged parts so that the surrogate test vehicle could be reused during testing in accordance with MASH criteria to decrease the cost of performing these tests. In addition, if possible, a "unified" design was desired which could use the same or similar surrogate test vehicles for evaluating the small car and pickup truck behaviors.

The geometrical and inertial properties of MASH test vehicles were reviewed to identify critical behaviors with which the new surrogate vehicle would be evaluated. The Kia Rio vehicle attributes obtained from the automotive attribute database in 4N6XPRT Expert AutoStats® [7] and consistent with a MASH 1100C small car vehicle are shown in Figures 1 and 2. An example Kia Rio 1100C small car test vehicle is shown in Figure 3. The Dodge Ram 1500 Quad Cab pickup truck attributes consistent with a MASH 2270P pickup truck test vehicle are shown in Figures 4 and 5. An example Dodge Ram 1500 Quad Cab 2270P pickup truck test vehicle is shown in Figure 6.

Expert AutoStats®

2012 KIA RIO 4 DOOR SEDAN

Horizontal Dimensions

Length	172
Wheelbase	101
Front Bumper to Front Axle	32
Front Bumper to Front Hood	6
Front Bumper to Bot. WindShield	35
Front Bumper to Top Wind Shield	68
Front Bumper to Front Wheel Well	18
Rear Bumper to Rear of Trunk	5
Rear Bumper to Rear Window	18
Rear Bumper to Rear Well	26
Rear Bumper to Rear Axle	39

Depth Dimensions

Width	68
Front Track	60
Rear Track	60

Vertical Dimensions

Height	57
Ground to:	
Front Bumper (Top)	21
Headlight - Center	30
Hood - Top Front	31
Base of Windshield	40
Rear Bumper (Top)	26
Trunk - Top Rear	43
Base of Rear Window	45

Weight Dimensions

Curb Weight	2406

Curb Weight Distribution:

Front = 61 %

Rear = 39 %

Gross Vehicle Weight

Expert AutoStats© Registered to: MIDWEST ROADSIDE SAFETY... Serial Number: 18R-121002AQ...

2012 KIA RIO 4 DOOR SEDAN

Acceleration/Braking

Acceleration 0-30 mph	13.8	ft/sec²
Acceleration 0-60 mph	9.3	ft/sec²
Acceleration 45-65 mph		ft/sec²
Braking 60-0 mph		feet

Bumper Strength	2.5	mph
Steering Ratio		

Drive Wheels	FRONT	
Turn Circle	33	feet
Number of Wheels	4	
Wheel Radius		
Tire Size	185/65R15	

Interior Dimensions

Front Shoulder Room	53
Front Head Room	40
Front Leg Room	44
Rear Shoulder Room	52
Rear Head Room	38
Rear Leg Room	31

ALL DISC - ALL WHEEL ABS

3pt - front and rear - FRONT SEAT AIRBAGS + SIDE AIRBAGS

6spd MANUAL

N.S.D.C. = 2012 - 2015

_____ = Not in Database

Expert AutoStats© Registered to: MIDWEST ROADSIDE SAFETY... Serial Number: 18R-121002AQ...

Registered Owner: MIDWEST ROADSIDE SAFETY FACILITY Serial Number: 18R-121002AQ05201

Figure 1. Vehicle Dimensions, 2012 Kia Rio [7]

Expert AutoStats®

2012 KIA RIO 4 DOOR SEDAN

Angle Measurements

Angle Front Bumper to Hood Front	=	59.0	degrees
Angle Front of Hood to Windshield Base	=	17.2	degrees
Angle Front of Hood to Windshield Top	=	21.2	degrees
Angle of Windshield	=	24.4	degrees
Angle of Steering Tires at Max Turn	=	29.2	degrees

Center of Gravity

Inches from ground	=	22.37	Inches from side of vehicle	=	34.00
Inches behind front axle	=	39.39	Inches in front of rear axle	=	61.61
Inches from front bumper	=	71.39	Inches from rear bumper	=	100.61
Inches from front corner	=	79.07	Inches from rear corner	=	106.20

Tip-Over Stability Ratio = 1.34 Stable

NHTSA Static Stability Factor (calculated) Star Rating = ****

Moments of Inertia

Yaw Moment of Inertia	=	1272.18	lb*ft*sec²
Pitch Moment of Inertia	=	1232.94	lb*ft*sec²
Roll Moment of Inertia	=	283.08	lb*ft*sec²

Expert AutoStats© Registered to: MIDWEST ROADSIDE SAFETY... Serial Number: 18R-121002AQ...

Figure 2. Angle and Stability Measurements, 2012 Kia Rio [7]

Figure 3. Kia Rio Crash Test Vehicle

Expert AutoStats®

2018 RAM 1500 QUAD CAB 140WB 4 DOOR 4X2 PICKUP

Horizontal Dimensions

Length	229
Wheelbase	140
Front Bumper to Front Axle	40
Front Bumper to Front Hood	4
Front Bumper to Bot. WindShield	51
Front Bumper to Top Wind Shield	80
Front Bumper to Front Wheel Well	19
Rear Bumper to Rear of Trunk	2
Rear Bumper to Rear Window	88
Rear Bumper to Rear Well	
Rear Bumper to Rear Axle	49

Depth Dimensions

Width	79
Front Track	68
Rear Track	68

Vertical Dimensions

Height	75
Ground to:	
Front Bumper (Top)	26
Headlight - Center	39
Hood - Top Front	47
Base of Windshield	54
Rear Bumper (Top)	25
Trunk - Top Rear	56
Base of Rear Window	55

Weight Dimensions

Curb Weight	5095
Curb Weight Distribution:	
Front =	53 %
Rear =	47 %
Gross Vehicle Weight	6700

Expert AutoStats© Registered to: MIDWEST ROADSIDE SAFETY... Serial Number: 18R-121002AQ...

2018 RAM 1500 QUAD CAB 140WB 4 DOOR 4X2 PICKUP

Acceleration/Braking

Acceleration 0-30 mph	17.6	ft/sec²
Acceleration 0-60 mph	11.7	ft/sec²
Acceleration 45-65 mph	7.3	ft/sec²
Braking 60-0 mph	123	feet

Drive Wheels	REAR	
Turn Circle	45	feet
Number of Wheels	4	
Wheel Radius		
Tire Size	265/70R17	

Bumper Strength	No Requirement
Steering Ratio	17.90:1

Interior Dimensions

Front Shoulder Room	66
Front Head Room	40
Front Leg Room	41
Rear Shoulder Room	66
Rear Head Room	40
Rear Leg Room	40

ALL DISC - ALL WHEEL ABS
3pt LAP & SHOULDER - front, None or Unknown - rear - FRONT SEAT AIRBAGS + SIDE AIRBAGS
AUTOMATIC

N.S.D.C. = 2013 - 2018
_____ = Not in Database

Expert AutoStats© Registered to: MIDWEST ROADSIDE SAFETY... Serial Number: 18R-121002AQ...

Figure 4. Vehicle Dimensions, 2018 Dodge Ram 1500 Quad Cab [7]

Expert AutoStats®

2018 RAM 1500 QUAD CAB 140WB 4 DOOR 4X2 PICKUP

Angle Measurements

Angle Front Bumper to Hood Front	=	79.2	degrees
Angle Front of Hood to Windshield Base	=	8.5	degrees
Angle Front of Hood to Windshield Top	=	18.9	degrees
Angle of Windshield	=	33.2	degrees
Angle of Steering Tires at Max Turn	=	29.7	degrees

Center of Gravity

Inches from ground	=	28.84	Inches from side of vehicle	=	39.50
Inches behind front axle	=	65.80	Inches in front of rear axle	=	74.20
Inches from front bumper	=	105.80	Inches from rear bumper	=	123.20
Inches from front corner	=	112.93	Inches from rear corner	=	129.38

Tip-Over Stability Ratio = 1.18 Reasonably Stable

NHTSA Static Stability Factor (calculated) Star Rating = ***

Moments of Inertia

Yaw Moment of Inertia	=	3904.85	lb*ft*sec²
Pitch Moment of Inertia	=	4049.40	lb*ft*sec²
Roll Moment of Inertia	=	885.90	lb*ft*sec²

Expert AutoStats© Registered to: MIDWEST ROADSIDE SAFETY... Serial Number: 18R-121002AQ...

Figure 5. Angle and Stability Measurements, 2018 Dodge Ram 1500 Quad Cab [7]

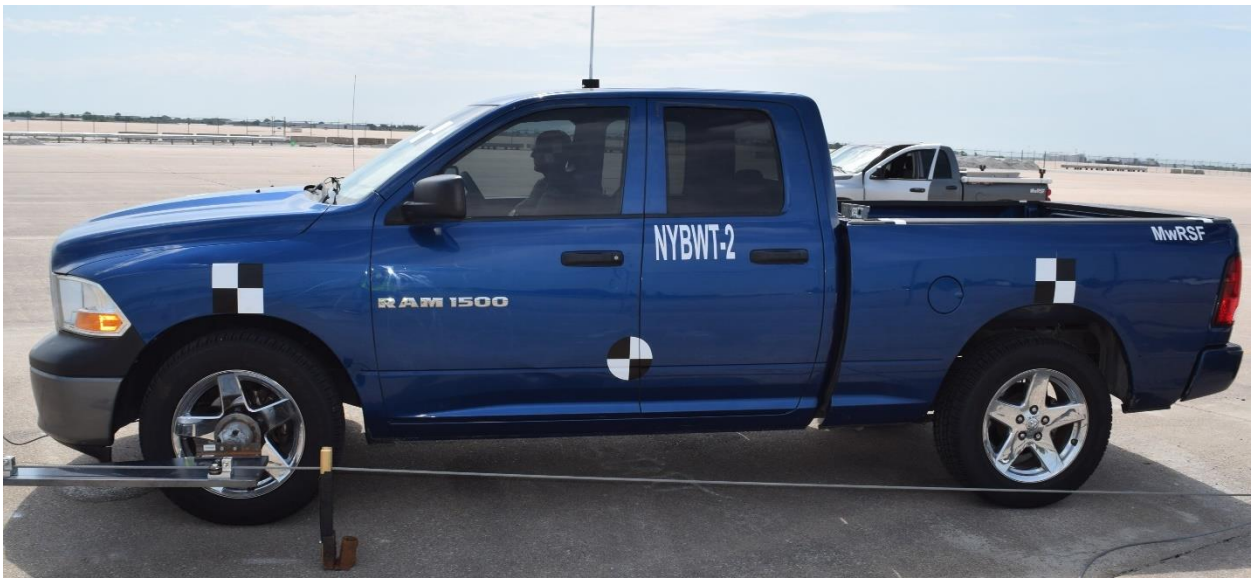

Figure 6. Dodge Ram Crash Test Vehicle

Based on the review of vehicle attributes and geometries, the following criteria were established to evaluate all surrogate vehicle concepts:

- Geometrical consistency at critical points
    - Front bumper lower and upper height, geometry
    - Front hood height and longitudinal offset from bumper at leading edge
    - Longitudinal and vertical location of the hood intersection at base of windshield
    - Windshield curve radius, inclination angle, and lower and upper heights and longitudinal offsets from bumper
    - Roof leading edge offset from bumper
    - Roof overall height and total length
    - Rear windshield longitudinal offset from front bumper
    - Rear windshield height at merger with roof, angle, and shape
- Stiffnesses
    - Bumper and bumper cover
    - Hood front edge
    - Hood vertical crush force
    - Windshield
    - Roof vertical crush force
- Inertial properties
    - Vehicle mass
    - Pitch and roll inertia
    - Center-of-gravity (c.g.) height
- Guidance, towing, and suspension
    - Capable of supporting towing/steering/guidance at test speeds up to MASH TL-3
    - Representative of vehicle vertical stiffnesses when traversing bumps, sign support masts or legs, and stable when traversing tarmac and soil areas
    - Oscillation natural frequency in pitch direction

Designing a single vehicle with functionality as both an 1100C and 2270P MASH-compliant surrogate, reusable test vehicle was challenging. It was decided to first design the vehicle with similar chassis, guidance system, suspension, and inertial properties as the 1100C small car, and to determine what changes, if any, would allow the new surrogate test vehicle to be modified to represent the behavior of the 2270P pickup truck.

Many of the properties evaluated in the small car criteria were either available or estimated based on the information provided by Expert AutoStats®, but some critical geometrical properties needed to be measured. Full three-dimensional scans were performed of an 1100C small car vehicle, which were digitized in a point cloud. Manual measurements collected using a FARO Edge scan arm, and baseline measurement points were also collected by hand to augment the digital mapping, as shown in Figure 7. The point cloud and measurement data were compared with an exemplar 3-D CAD geometry of a similar 2012 Kia Rio small car, and variances were observed to be within an estimated ½ in. for all critical measurement locations. Therefore, the CAD geometry of the Kia Rio was used to develop concepts for a new, surrogate, reusable, 1100C test vehicle.

Figure 7. Scan and Geometry Measurements of 2012 Kia Rio

Figure 8. 3-D CAD of 2012 Kia Rio [8]

3.2 Evaluation of Surrogate Bogie Profiles

It was preferred that, if possible, existing MwRSF rigid-frame bogie vehicles could be adapted to match the geometrical and inertial properties of the MASH small car. The following bogie vehicles had been constructed and were available at MwRSF's Outdoor Test Site:

- Bogie No. 1 was constructed in the 1990s and was consistent with a Volkswagon Rabbit profile. The bogie could be equipped with a crushable-nose that was filled with aluminum honeycomb cartridges. Due to extensive vibrations of the bogie frame in accelerometer readings observed during testing, this vehicle was retired from service.

- Bogie No. 2 was a rigid, steel-frame vehicle weighing approximately 4,580 lb. The bogie vehicle is symmetrical and uses four E-rated, stiff trailer tires, and can be customized with different impact heads.

- Bogie No. 3 was a rigid, steel-frame vehicle with lightweight chassis used primarily for recording resistance forces from post-in-soil testing. The bogie weighed approximately 1,350 lb and could be customized with various impact heads.

- Bogie No. 4 was a rigid, steel-frame vehicle, which had previously been used for preliminary sign support compliance testing in lieu the 820C small car test vehicle under NCHRP Report No. 350 [9] as well as to evaluate the propensity for some cable barrier posts to tear test vehicle floor pans. Unfortunately, previous attempts with a bumper, hood, and windshield mounting frame for this vehicle could not successfully replicate the behavior of the 820C Geo Metro small car.

- Bogie No. 5 was constructed in the early 2000s and consisted of an upper structure conforming to a Chevrolet C2500 profile and placed on top of Bogie No. 1. The bogie represented the first major attempt for a reusable vehicle to evaluate sign support behaviors with taller vehicles, but testing with the pickup profile was limited and not calibrated to full-scale crash test data.

The five bogie vehicles are shown in Figures 9 and 10.

Figure 9. MwRSF Bogie Vehicle Nos. 1 through 4

Figure 10. MwRSF Bogie Vehicle No. 5

Although each of the five bogie vehicles had sufficient structural strength to support an additional frame for mounting key components to replicated crash test vehicles, such as hood, bumper, windshield, and roof, concerns were raised about each of the four vehicles. First, none of the bogie vehicles had wheelbase, track width, or suspension characteristics, which were representative of either the 1100C or 2270P vehicles. Second, all bogie vehicles were designed with rigid mounting hardware for the wheels. It has been observed that suspensionless bogie vehicles can track well on MwRSF guidance systems at low speeds but show instability and loss of guidance or control at higher speeds.

In addition, previous efforts tried to replicate the behavior of the NCHRP Report No. 350 820C small car vehicle using bogie no. 4. These tests utilized a parabolic, stiff rubber bumper, plastic bumper cover, hood, and windshield. However, after several impacts, the impact behavior of the bogie vehicle with retrofit assemblies did not replicate the behavior of the crash test vehicle in select work-zone traffic control devices, specifically portable sign stands. A thorough review suggested that the stiff rubber bumper, customized hood and windshield mounts, and changes in suspension, rotational inertia, and mass affected bogie vehicle interaction with the lightweight sign supports.

It was desired that a single bogie vehicle could be modified or retrofitted to represent both the 1100C and 2270P test vehicles, but the 2,580-lb difference in weight between the 2270P and 1100C vehicles was greater than the 2,425-lb curb weight of the 1100C. It was not believed that a single, one-size-fits-all bogie could be reasonably developed with the available time and money. Therefore, researchers focused exclusively on reusable, surrogate, vehicle designs, which would be consistent with the 1100C small car.

3.3 New Surrogate Vehicle Design Options

Three concepts were developed for a new reusable surrogate test vehicle and compared against the geometry and vehicle attributes for the 1100C small car vehicle. Details of each of the design options are discussed below.

3.3.1 Design No. 1

For the first design concept, researchers mapped critical points on the Kia Rio CAD corresponding to the windshield top and bottom mounting locations and rake angle, hood mounting locations and rake angle, grille, and bumper locations. A load frame was designed to support approximately 10,000 lb without frame deformation in critical load locations. Then, critical surrogate vehicle supports, which were needed for mounting accelerometers and other instrumentation, were added to the surrogate vehicle frame. The concept development of design no. 1 is shown in Figure 11.

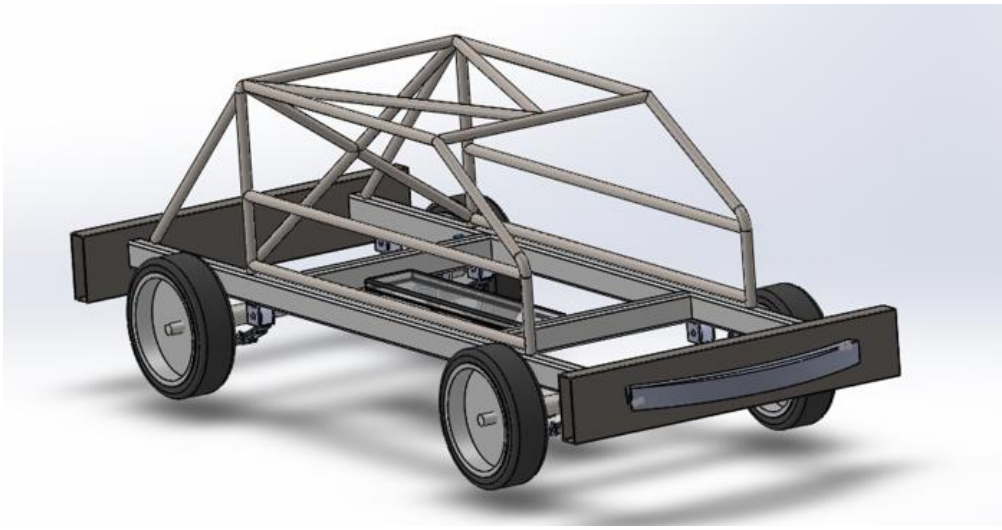

Iteration 1

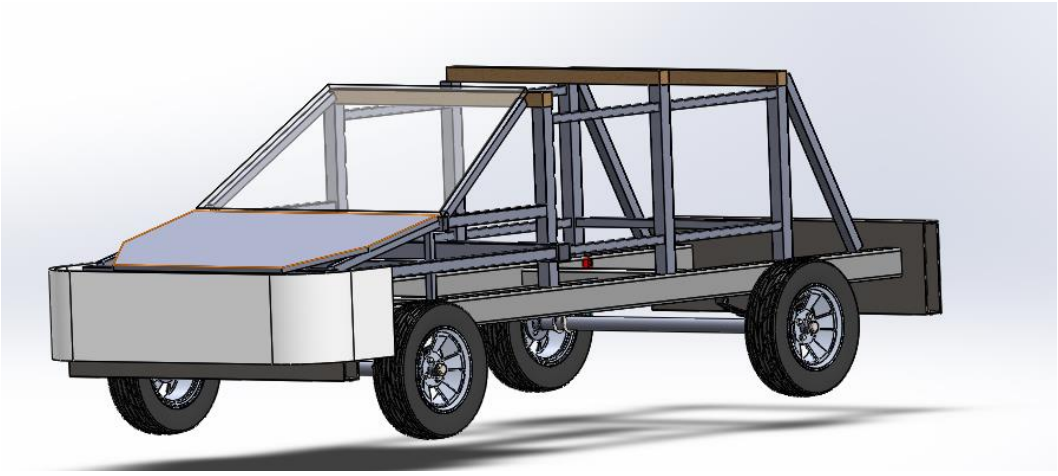

Iteration 2

Figure 11. Design No. 1 Surrogate Vehicle Frame Iterations

The surrogate vehicle concepts in design no. 1 had a track width and wheelbase of 60 and 101 in., respectively, which satisfied the MASH vehicle criteria and were consistent with the Kia Rio. To provide surrogate vehicle wheel suspension support, both the front and rear wheels were supported using solid-axle Hotchkis (i.e., leaf spring) suspensions, rated for maximum loads of approximately 2,500 lb each. Key chassis frames were located to allow for the principal direction of impact force to travel along the longitudinal chassis. Mounting locations and heights of critical components were identified to replicate weight distribution, total ballast weight on front and rear axles, suspension and tire deflections, ballast locations, as well as the rotational and translational inertial properties of the Kia Rio.

Further iterations were performed to design quick-mount connections to allow MwRSF's Outdoor Test Site staff to perform rapid repairs to the surrogate vehicle between tests. Mounting hardware was modified to allow for fast replacement of damaged original equipment manufacturer (OEM) components, such as the hood, windshield, bumper cover, bumper load cartridge, and headlights (if required) and with new components.

Although the design was intended to match the behavior and construction of the Kia Rio with high fidelity, demanding constructional tolerances and fabrication difficulties led to significant fabrication expenses, which exceeded the price of a brand new small car. Therefore, other concepts using simplified fabrication were considered.

3.3.2 Design No. 2

The second design iteration addressed fabrication problems by modularizing the surrogate vehicle configuration. Four distinct fabrication steps were recommended, which allowed for proper customization and minimization of errors:

- Chassis Frame - The primary load frame of the vehicle was a planar, tubular steel frame with an open front end, tubular back plate, and width tuned to the frame width of the Kia. The chassis frame recommendation is shown in Figure 12.

- Suspension - Concerns were raised during the discussion of design no. 1 that bases or stubs of work-zone, temporary sign stands and breakaway sign supports may impact the undercarriage of the surrogate vehicle. It was desired that a floorpan representation be added to the surrogate vehicle to indicate whether undercarriage contact would potentially occur and lead to test failure by penetrating through vehicle floorpans. It was believed that a solid axle suspension system could significantly interfere with the accuracy and versatility of the undercarriage contact mechanics. Additionally, direct impact with sign support systems could damage the solid axle system, leading to costly and time-intensive repairs. To simplify the suspension mounting and control the ride height of the surrogate vehicle, an independent wheel trailer suspension kit was selected in lieu of the original double, solid-axle suspension configuration of design no. 1. The preferred independent suspension for cost, guidance, and ease of replacement or repair was a Timbren 2,500-lb rated suspension, as shown in Figure 13.

- OEM Frame - Due to the spatial irregularity of aerodynamically-styled components for the bumper, hood, windshield, and roof, fabrication may be difficult to replicate good

connections for these OEM components. By extracting these components from a real vehicle and strongly-reinforcing connection points, it may be possible to produce a more accurate representation of real vehicle interactions. This component extraction could be accomplished by cutting (e.g., plasma torch) critical connections, including bumper load frame, bumper cartridge and plastic bumper cover mounts, hood latch and cradle mounts, windshield "A"-pillar and roof supports, and air dam components and welding them to a frame in their corresponding locations and offsets from the front wheels.

- Profile Assembly - The final assembly module of design no. 2 consisted of an ad hoc space frame, which connected the OEM frame to the chassis frame at the correct heights, longitudinal positions, and stiffnesses as a representative crash test vehicle. Using the Kia Rio CAD, 3-D scans, and physical measurements, the OEM frame would be positioned in space relative to the chassis frame and connecting elements would be used to support the vehicle shape. Additionally, ballast would be added to the vehicle in critical locations to satisfy weight and inertial properties of the representative vehicle.

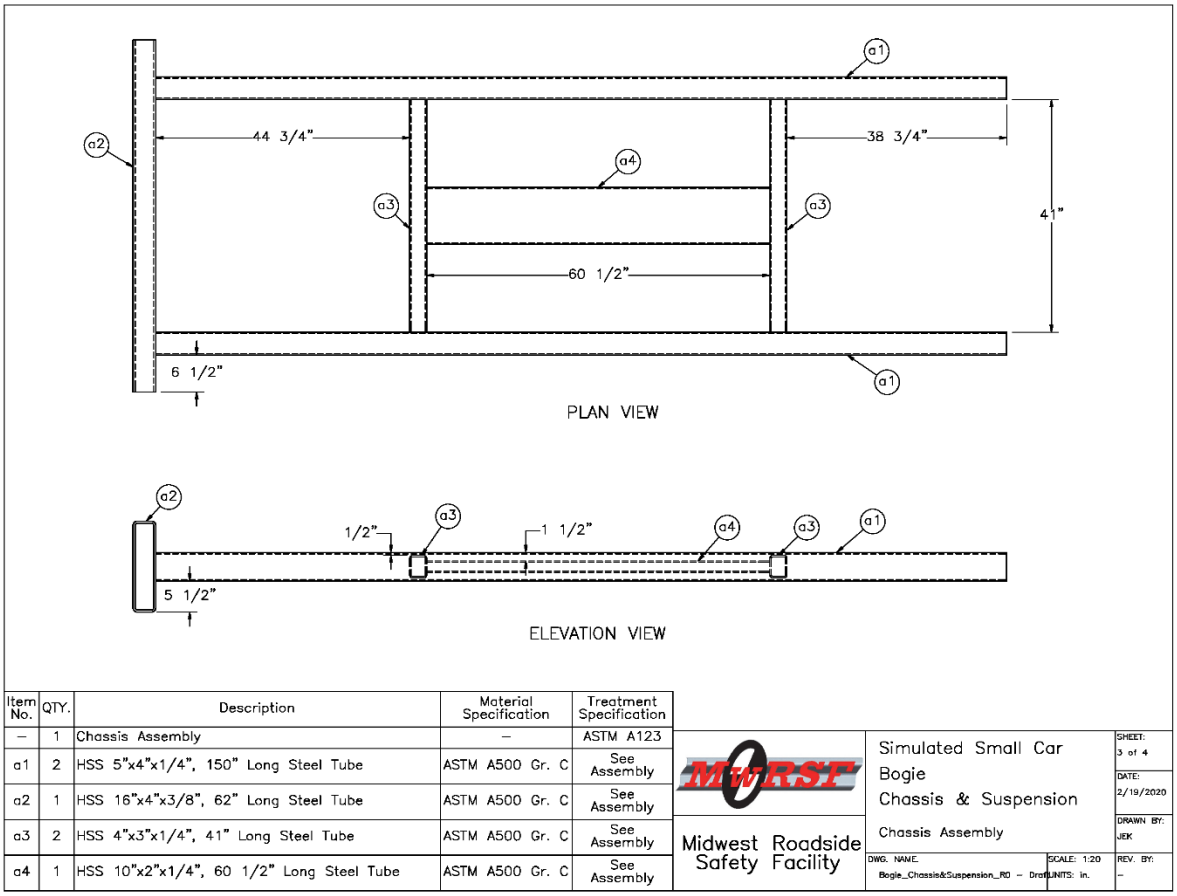

Figure 12. Suspension Chassis Frame Assembly, Surrogate Vehicle Design No. 2

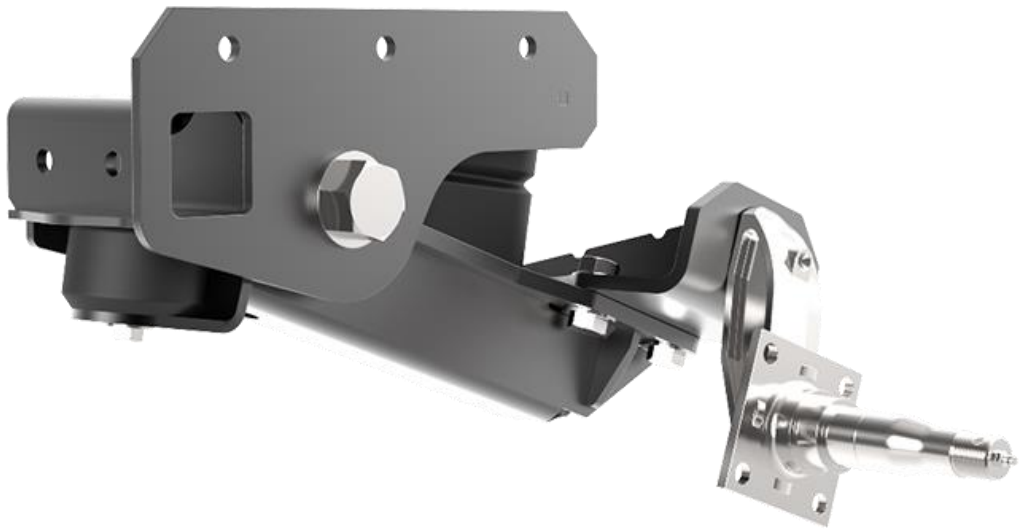

Figure 13. Timbren Low-Profile Suspension Mount [10], Surrogate Vehicle Design No. 2

3.3.3 Design No. 3

Design no. 2 was estimated to have very high fabrication and maintenance costs. Researchers investigated a lower-cost, third surrogate vehicle option, which used an existing 1100C test vehicle with strengthening at critical locations and modifications to allow for easy repair with replaceable components after damage. Component repair and replacement would also utilize OEM components that could be installed on the existing frame of the surrogate, reusable, 1100C test vehicle. This design option was determined to be the lowest cost with the highest intrinsic fidelity to MASH 1100C small car designs.

3.4 Surrogate, Reusable, 1100C Test Vehicle Selection

The reduced-cost and simplified construction required for the third surrogate vehicle option, with the highest likelihood for comparability to the existing 1100C small car vehicle dynamics, led to its selection as the surrogate, reusable, 1100C test vehicle. A further review of the critical components of the surrogate vehicle option and their connections led to the following modifications to the Kia Rio small car for its use as a surrogate, reusable, 1100C test vehicle:

- Bumper cartridge, bumper cover (shroud), hood, and front and rear windshields - Each of these components are standard OEM parts, relatively inexpensive, and readily available. Attachment of these components to the vehicle are usually small bolts, although the windshield is usually adhered to the frame using a silicone adhesive. Quick-exchange clip mounts were attached to the frame, which were robust and developed the full strength of the components, mimicked original component geometries, connections, and alignments, and were much faster and simpler to replace than full OEM part installation. Images of the vehicle modifications are shown in Figures 14 and 15.

- Roof - The Kia Rio roof is a single-ply steel sheet, continuous panel extending between both A- and B-frames. The roof is not an OEM standard part, but replacement roof panels

with the correct geometries, thicknesses, and modified attachments were identified as purchasable counterparts to OEM hardware. Unique attachments, which would replicate the tensile membrane reactions of the roof panel, could be added at the roof line on the vehicle sides to mimic the original geometry of the roof.

- Undercarriage - The vehicle undercarriage consists of components in exhaust, suspension, frame, body structure, and floorpan assemblies. Of these components, only floorpan tearing or extensive floorpan deformation are prohibited. As shown in Figure 16, a steel sheet was bolted to the undercarriage to shield critical wiring (remote braking signal wire, power, instrumentation) but the remainder of the undercarriage was not modified.

(a)

(b)

Figure 14. Surrogate, Reusable, 1100C Test Vehicle Bumper and Hood Modifications (a) before OEM Replacement and (b) after OEM Replacement

(a)

(b)

Figure 15. Surrogate, Reusable, 1100C Test Vehicle Windshield Modification (a) before OEM Replacement and (b) after OEM Replacement

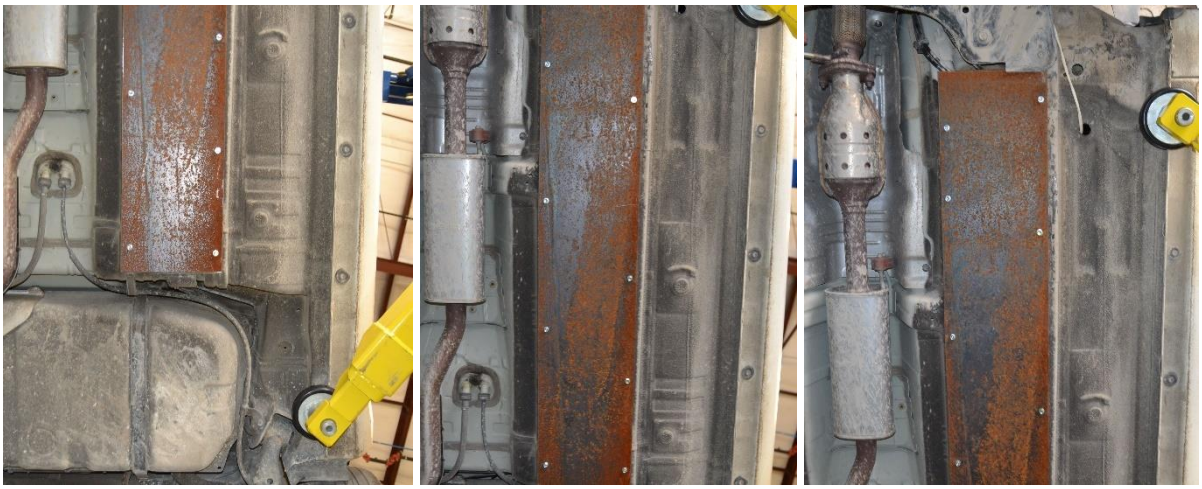

Figure 16. Surrogate, Reusable, 1100C Test Vehicle Modifications to Undercarriage

The modified vehicle was visually indistinguishable from an unmodified small car and utilized standard hardware and representative connections whenever feasible. Nonetheless, this vehicle was limited in use to scenarios with a low risk of critical structural damage (deformation greater than the depth of the crushable bumper cartridge or damage to the door sill connections). Undercarriage contact and damage would be monitored, but the surrogate, reusable, test vehicle was only intended to predict if undercarriage contact would pose the risk of floor pan penetration and was not intended to predict occupant compartment intrusion. Lastly, it must be reiterated that a 2012 Kia Rio was used as the surrogate, reusable, 1100C test vehicle. It is understood that future changes could occur to MASH small car vehicle selection as well as vehicle geometry that are significantly different than the current test vehicle geometry. In such cases, the design no. 3 surrogate vehicle may not predict vehicle-to-test hardware interactions that are consistent with updated MASH vehicle requirements.

4 TEST REQUIREMENTS AND EVALUATION CRITERIA

4.1 Test Requirements

Support structures, such as U-channel sign supports, must satisfy impact safety standards in order to be declared eligible for federal reimbursement by the FHWA for use on the National Highway System (NHS). For new and existing hardware, these safety standards consist of the guidelines and procedures published in MASH 2016. According to TL-3 criteria, support structures must be subjected to three full-scale vehicle crash tests, as summarized in Table 2.

Table 2. MASH 2016 TL-3 Crash Test Conditions for Support Structures

Test Article	Test Designation No.	Test Vehicle	Vehicle Weight, lb	Impact Conditions		Evaluation Criteria[1]
				Speed, mph	Angle, degrees	
Support Structures	3-60	1100C	2,420	19	CIA	B,D,F,H,I,N
	3-61	1100C	2,420	62	CIA	B,D,F,H,I,N
	3-62	2270P	5,000	62	CIA	B,D,F,H,I,N

[1]Evaluation criteria explained in Table 3

Surrogate vehicle testing was planned for the research and development effort in accordance with MASH test designation nos. 3-60 and 3-61 on various sign support systems. Each sign support installation was contacted by the surrogate, reusable, 1100C test vehicle at a 0-degree angle. MASH notes that the critical impact angle (CIA) should be selected to represent the highest risk for the system to fail any of the recommended evaluation criteria. Since permanent sign supports are not typically installed 90 degrees from the normal direction of travel, a critical impact angle ranging between 0 and 25 degrees is recommended. Historically, sign systems have been impacted using a 0-degree angle due to a belief that it provided the most critical condition for maximizing the potential area of sign panel contact with the windshield and roof. The critical impact point in each test was either the centerline or the right or left quarter point of the vehicle's front bumper in accordance with MASH recommendations for impact points at 0-degree impact angles. For this exploratory research effort, only 0-degree impacts were evaluated, although further evaluation is recommended to determine if non-zero impact angles are more critical for single, U-channel, breakaway sign support evaluations.

Note that although the surrogate, reusable, 1100C test vehicle nearly resembled a compliant 1100C MASH small car, the test results are considered exploratory in nature. Thus, the test results are believed to be consistent with MASH 1100C crash performance according to MASH 3-60 or 3-61 specifications, and a 0-degree impact angle. Additionally, MASH test designation no. 3-62 impact conditions were not conducted as part of this research and development effort. Therefore, future research and development will be required with 2270P vehicles or 2270P surrogate vehicles to better understand MASH TL-3 behavior of the systems investigated herein. For a complete evaluation of the sign support systems examined herein, MASH TL-3 crash tests should be conducted on each system, as shown in Table 2. As well, further investigation may be necessary to evaluate system performance at a non-zero impact angle, up to 25 degrees as specified in MASH.

4.2 Evaluation Criteria

Evaluation criteria for vehicle crash testing are based on three appraisal areas: (1) structural adequacy; (2) occupant risk; and (3) vehicle trajectory after collision. Criteria for structural adequacy is that the test article should readily activate in a predicable manner by breaking away, fracturing, or yielding. Occupant risk evaluates the degree of hazard to occupants in the impacting vehicle. Post-impact vehicle trajectory is a measure of the potential of the vehicle to result in a secondary collision with other vehicles and/or fixed objects, thereby increasing the risk of injury to the occupants of the impacting vehicle and/or other vehicles. These evaluation criteria are summarized in Table 3 and are defined in greater detail in MASH 2016.

It is important to note that in tests of breakaway features, the impulse on the vehicle may be relatively small and of short duration. It is not unusual for x and y in the flail-space model to be less than 2 ft and 1 ft, respectively, during the period in which accelerations are recorded or up to the time brakes are applied to the test vehicle. As specified in Section A5.5.2 of MASH 2016, in such cases, it is recommended that the OIV be set equal to the vehicle's change in velocity that occurs during contact with the test article, or parts thereof [1]. If parts of the test article remain with the vehicle after impact, the vehicle's change in velocity should be computed at the time the vehicle clears the footing or foundation of the test article.

In addition to the standard occupant risk measures, the Post-Impact Head Deceleration (PHD), Theoretical Head Impact Velocity (THIV), and Acceleration Severity Index (ASI) were determined and reported. Additional discussion on PHD, THIV, and ASI is provided in MASH 2016.

Table 3. MASH 2016 Evaluation Criteria for Support Structures

<table>
<tr><td>Structural Adequacy</td><td>B.</td><td colspan="3">The test article should readily activate in a predictable manner by breaking away, fracturing, or yielding.</td></tr>
<tr><td rowspan="6">Occupant Risk</td><td>D.</td><td colspan="3">Detached elements, fragments or other debris from the test article should not penetrate or show potential for penetrating the occupant compartment, or present an undue hazard to other traffic, pedestrians, or personnel in a work zone. Deformations of, or intrusions into, the occupant compartment should not exceed limits set forth in Section 5.2.2 and Appendix E of MASH 2016.</td></tr>
<tr><td>F.</td><td colspan="3">The vehicle should remain upright during and after collision. The maximum roll and pitch angles are not to exceed 75 degrees.</td></tr>
<tr><td rowspan="3">H.</td><td colspan="3">Occupant Impact Velocity (OIV) (see Appendix A, Section A5.2.2 of MASH 2016 for calculation procedure) should satisfy the following limits:</td></tr>
<tr><td colspan="3">Occupant Impact Velocity Limits</td></tr>
<tr><td>Component</td><td>Preferred</td><td>Maximum</td></tr>
<tr><td>Longitudinal and Lateral</td><td>10 ft/s</td><td>16 ft/s</td></tr>
<tr><td rowspan="3">I.</td><td colspan="3">The Occupant Ridedown Acceleration (ORA) (see Appendix A, Section A5.2.2 of MASH 2016 for calculation procedure) should satisfy the following limits:</td></tr>
<tr><td colspan="3">Occupant Ridedown Acceleration Limits</td></tr>
<tr><td>Component</td><td>Preferred</td><td>Maximum</td></tr>
<tr><td>Longitudinal and Lateral</td><td>15.0 g’s</td><td>20.49 g’s</td></tr>
<tr><td>Post-Impact Vehicular Response</td><td>N.</td><td colspan="3">Vehicle trajectory behind the test article is acceptable.</td></tr>
</table>

5 TEST CONDITIONS

5.1 Test Facility

The Outdoor Test Site is located at the Lincoln Air Park on the northwest side of the Lincoln Municipal Airport and is approximately 5 miles northwest of the University of Nebraska-Lincoln.

5.2 Vehicle Tow and Guidance System

A reverse-cable, tow system with a 1:2 mechanical advantage was used to propel the test vehicle. The distance traveled and the speed of the tow vehicle were one-half that of the test vehicle. The test vehicle was released from the tow cable before impact with the breakaway sign supports. A digital speedometer on the tow vehicle increased the accuracy of the test vehicle impact speed.

A vehicle guidance system developed by Hinch [11] was used to steer the test vehicle. A guide flag, attached to the guide cable and the right-front wheel in test no. UCSS-2 and the left-front wheel in test nos. UCSS-3 through UCSS-11, was sheared off before impact with the barrier system. The ⅜-in. diameter guide cable was tensioned to approximately 3,500 lb and supported both laterally and vertically every 100 ft by hinged stanchions. The hinged stanchions stood upright while holding up the guide cable, but as the vehicle was towed down the line, the guide flag struck and knocked each stanchion to the ground.

5.3 Test Vehicles

For test nos. UCSS-2 through UCSS-11, a surrogate, reusable, 1100C test vehicle, which was developed from a 2012 Kia Rio small car, was used to test and evaluate the breakaway sign support systems. The curb, test inertial, and gross static vehicle weights were 2,480 lb, 2,432 lb, and 2,432 lb, for test nos. UCSS-2 through UCSS-4 and 2,480 lb, 2,408 lb, and 2,421 lb for test nos. UCSS-5 through UCSS-11, respectively. The surrogate test vehicle is shown in Figures 17 through 19, and vehicle dimensions are shown in Figure 20. Note that the model year lies outside of the MASH 2016 six-year-old targeted range for tests conducted in the year 2020. During the initial phase of the testing, difficulties were observed with acquiring test vehicles consistent with specifications required in MASH 2016. AASHTO guidance provided in 2018 indicated that older test vehicles could be used in MASH-compliant testing if the specifications for the vehicles were consistent with MASH requirements; supplemental guidance in 2019 updated test vehicle geometrical parameters which were more consistent with newer vehicle years. While the surrogate, reusable, 1100C test vehicle is representative of the MASH 1100C vehicle, it was used for research and development purposes, and the tests detailed herein are not in compliance with the vehicle age criterion of MASH 2016. It is anticipated that these tests will be reviewed and analyzed in future studies to evaluate potential for eligibility as MASH full-scale crash tests. Note that pre-test photographs of the vehicle's interior floorboards are not available.

The longitudinal component of the center of gravity (c.g.) was determined using the measured axle weights. The vertical component of the c.g. for the 1100C vehicle was determined utilizing a procedure published by SAE [12]. The location of the final c.g. is shown in Figures 20

and 21. Data used to calculate the location of the c.g. and ballast information are shown in Appendix A.

Square, black- and white-checkered targets were placed on the vehicle for reference to be viewed from the high-speed digital video cameras and aid in the video analysis, as shown in Figure 21. Round, checkered targets were placed at the c.g. on the left-side door and the right-side door. Additional black- and white-checkered targets were placed along the vehicle sills to aid in the processing of the vehicle LIDAR scans. Locations of the LIDAR targets were not recorded.

The front wheels of the test vehicle were aligned to vehicle standards except the toe-in value was adjusted to zero such that the vehicles would track properly along the guide cable. A 5B flash bulb was mounted under the vehicle's left-side windshield wiper and was fired by a pressure tape switch mounted at the impact location of the bumper. The flash bulb was fired upon initial impact with the test article to create a visual indicator of the precise time of impact on the high-speed digital videos. A remote-controlled brake system was installed in the test vehicle so the vehicle could be brought safely to a stop after the test.

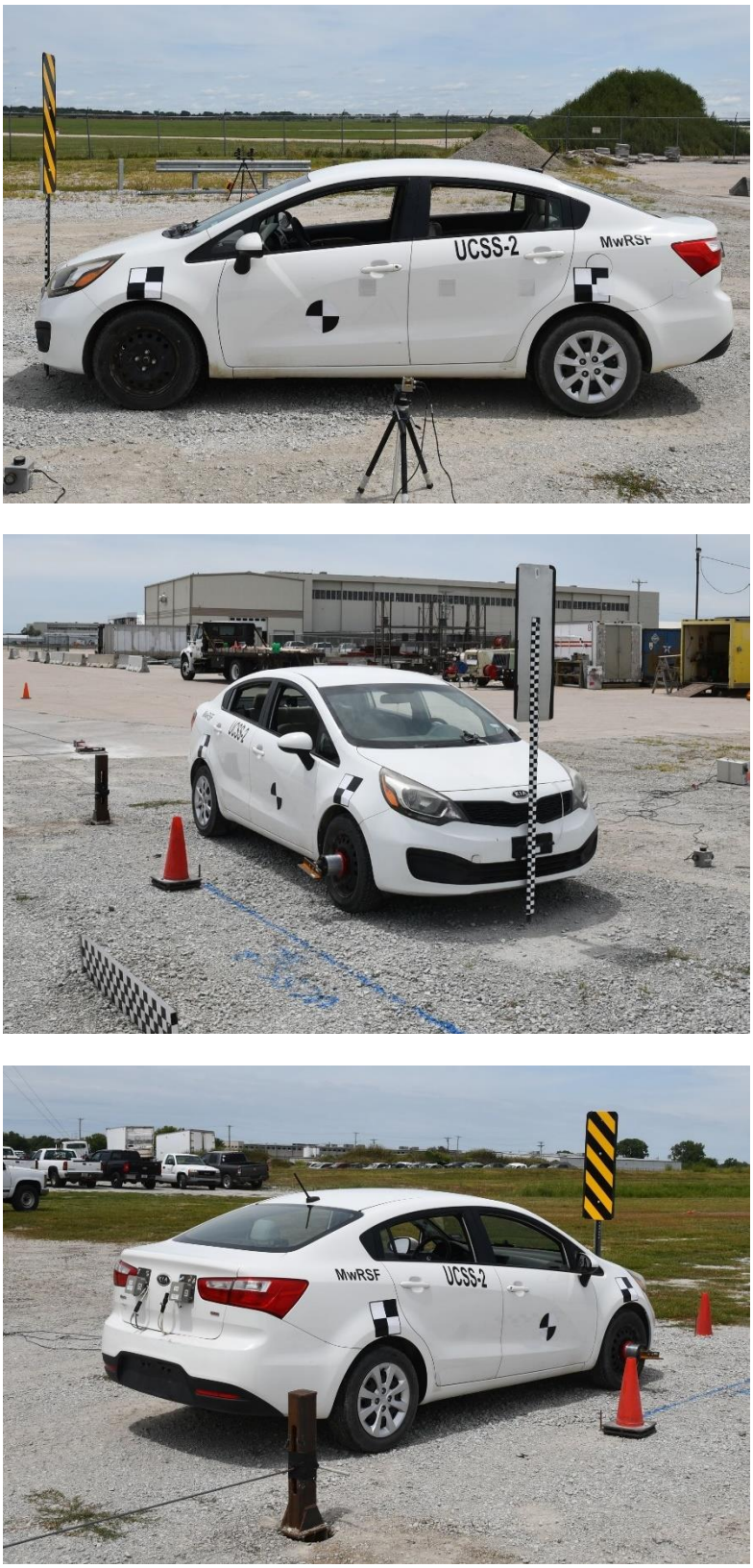

Figure 17. Test Vehicle, Test Nos. UCSS-2 through UCSS-11

Figure 18. Pretest Test Vehicle's Undercarriage, Test Nos. UCSS-2 through UCSS-11

Figure 19. Test Vehicle's Undercarriage, Test Nos. UCSS-2 through UCSS-11

		Test Name:	Ucss	VIN No:	knadm4a38c6085061
Model Year:	2012	Make:	Kia	Model:	Rio
Tire Size:	185/65R15	Tire Inflation Pressure:	32 psi	Odometer:	123552

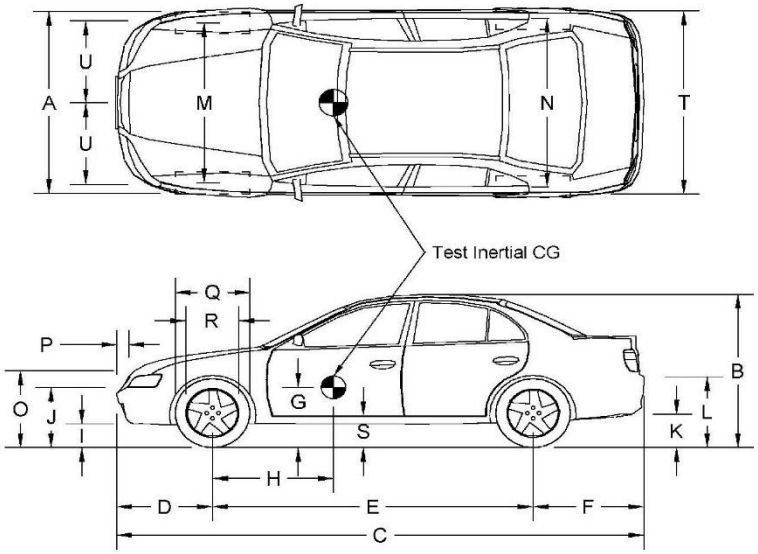

Vehicle Geometry - in. (mm)
Target Ranges listed below

A:	67	(1702)	B:	57 3/4	(1467)
	65±3 (1650±75)				
C:	171 7/8	(4366)	D:	33	(838)
	169±8 (4300±200)			35±4 (900±100)	
E:	101	(2565)	F:	37 7/8	(962)
	98±5 (2500±125)				
G:	22 7/16	(570)	H:	40 5/16	(1024)
				39±4 (990±100)	
I:	9	(229)	J:	23 3/4	(603)
K:	25 5/8	(651)	L:	12 5/8	(321)
M:	59 7/8	(1521)	N:	59 7/8	(1521)
	56±2 (1425±50)			56±2 (1425±50)	
O:	31 3/4	(806)	P:	3	(76)
	24±4 (600±100)				
Q:	24	(610)	R:	16 3/4	(425)
S:	11 5/8	(295)	T:	67	(1702)

U (impact width):	33 1/2	(851)
Top of radiator core support:	29 1/2	(749)
Wheel Center Height (Front):	11 3/8	(289)
Wheel Center Height (Rear):	26	(660)
Wheel Well Clearance (Front):	11 5/8	(295)
Wheel Well Clearance (Rear):	26 1/4	(667)
Bottom Frame Height (Front):	6	(152)
Bottom Frame Height (Rear):	8	(203)

Mass Distribution - lb (kg)

Gross Static	LF	708	(321)	RF	753	(342)
	LR	485	(220)	RR	486	(220)

Weights lb (kg)	Curb		Test Inertial		Gross Static	
W-front	1509	(684)	1461	(663)	1461	(663)
W-rear	971	(440)	971	(440)	971	(440)
W-total	2480	(1125)	2432	(1103)	2432	(1103)
			2420±55 (1100±25)		2585±55 (1175±50)	

Engine Type:	Gasoline
Engine Size:	1.6 4 cyl
Transmission Type:	Manual
Drive Type:	FWD

GVWR Ratings lb	
Front	2028
Rear	1852
Total	3595

Surrogate Occupant Data	
Type:	Hybrid II
Mass:	161 lb
Seat Position:	N/a

Note any damage prior to test: No Damage

Figure 20. Vehicle Dimensions, Test Nos. UCSS-2 through UCSS-11

Test Name: Ucss VIN: knadm4a38c6085061
Model Year: 2012 Make: Kia Model: Rio

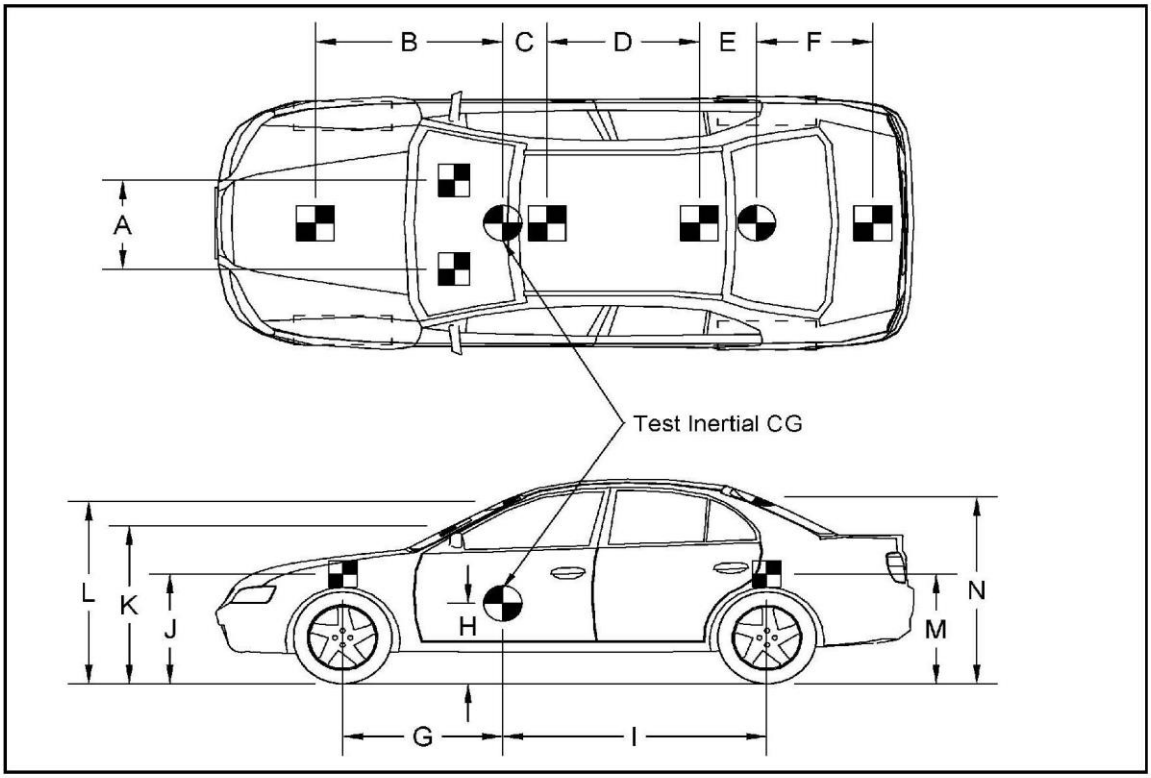

TARGET GEOMETRY-- in. (mm)

A:	N/a	F:	N/a	K:	N/a (Windshield Target)
B:	N/a	G:	40 5/16 (1024)	L:	N/a (Front round CG target)
C:	N/a	H:	22 7/16 (570)	M:	30 1/4 (768)
D:	N/a	I:	61 3/16 (1554)	N:	N/a (Rear Round target)
E:	N/a	J:	29 7/8 (759)		

Figure 21. Target Geometry, Test Nos. UCSS-2 through UCSS-11

5.4 Data Acquisition Systems

5.4.1 Accelerometers

Two environmental shock and vibration sensor/recorder systems were used to measure the accelerations in the longitudinal, lateral, and vertical directions. All accelerometer systems were mounted near the c.g. of the test vehicle. The electronic accelerometer data obtained in dynamic testing was filtered using the SAE Class 60 and the SAE Class 180 Butterworth filter conforming to the SAE J211/1 specifications [13].

The two systems, the SLICE-1 and SLICE-2 units, were modular data acquisition systems manufactured by Diversified Technical Systems, Inc. (DTS) of Seal Beach, California. The SLICE-1 unit was designated as the primary system in each test. The acceleration sensors were mounted inside the bodies of custom-built, SLICE 6DX event data recorders and recorded data at 10,000 Hz to the onboard microprocessor. Each SLICE 6DX was configured with 7 GB of non-volatile flash memory, a range of ±500 g's, a sample rate of 10,000 Hz, and a 1,650 Hz (CFC 1000) anti-aliasing filter. The "SLICEWare" computer software programs and a customized Microsoft Excel worksheet were used to analyze and plot the accelerometer data.

5.4.2 Rate Transducers

Two identical angular rate sensor systems mounted inside the bodies of the SLICE-1 and SLICE-2 event data recorders were used to measure the rates of rotation of the test vehicle. Each SLICE MICRO Triax ARS had a range of 1,500 degrees/sec in each of the three directions (roll, pitch, and yaw) and recorded data at 10,000 Hz to the onboard microprocessors. The raw data measurements were then downloaded, converted to the proper Euler angles for analysis, and plotted. The "SLICEWare" computer software program and a customized Microsoft Excel worksheet were used to analyze and plot the angular rate sensor data.

5.4.3 Retroreflective Optic Speed Trap

The retroreflective optic speed trap was used to determine the speed of the vehicle before impact. Five retroreflective targets, spaced at approximately 18-in. intervals, were applied to the left side of the vehicle. When the emitted beam of light was reflected by the targets and returned to the Emitter/Receiver, a signal was sent to the data acquisition computer, recording at 10,000 Hz, as well as the external LED box activating the LED flashes. The speed was then calculated using the spacing between the retroreflective targets and the time between the signals. LED lights and high-speed digital video analysis are only used as a backup in the event that vehicle speeds cannot be determined from the electronic data.

5.4.4 Vehicle Deformation Measurement

A FARO Freestyle was utilized to capture and record critical vehicle deformation data for each applicable test. The FARO Freestyle is a 3-D scanner that utilizes light detection and ranging (LIDAR) technology to capture the vehicle deformation data. The raw data was processed utilizing the FARO SCENE Capture program and the report figures and vehicle deformation measurements were generated with the CloudCompare program.

The lighting and reflectivity of the vehicle surfaces were controlled to mitigate erroneous data point collection. Black- and white-checkered targets were placed along the vehicle sills in locations that would not experience deformation and were utilized as anchor points to align vehicle scans for deformation measurements. Each time the surrogate, reusable, 1100C test vehicle was repaired, a new baseline scan was performed to establish a comparison for damage in post-test analysis and to confirm the surrogate, reusable, 1100C test vehicle remained representative of the geometry of the MASH 1100C small car vehicle.

5.4.5 Digital Photography

Two AOS high-speed digital video cameras, three GoPro digital video cameras, and four Panasonic digital video cameras were utilized to film test no. UCSS-2. Two AOS high-speed digital video cameras, three GoPro digital video cameras, and three Panasonic digital video cameras were utilized to film test nos. UCSS-3 through UCSS-9. Two AOS high-speed digital video cameras, two GoPro digital video camera, and three Panasonic digital video cameras were utilized to film test no. UCSS-10. Two AOS high-speed digital video cameras, three GoPro digital video cameras, and three Panasonic digital video cameras were utilized to film test no. UCSS-11. Camera details, camera operating speeds, lens information, and a schematic of the camera locations relative to the system are shown in Figures 22 through 31 for test nos. UCSS-2 through UCSS-11, respectively.

The high-speed videos were analyzed using TEMA Motion and Redlake MotionScope software programs. Actual camera speed and camera divergence factors were considered in the analysis of the high-speed videos. A digital still camera was also used to document pre- and post-test conditions for the test.

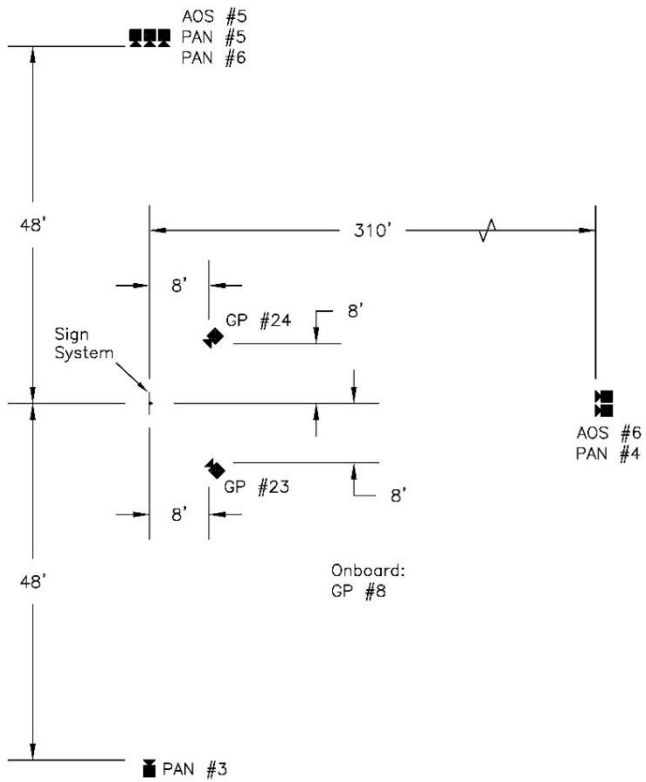

No.	Type	Operating Speed (frames/sec)	Lens	Lens Setting
AOS-5	AOS X-PRI	500	Fujinon 75 mm Fixed	-
AOS-6	AOS X-PRI	-	Fujinon 50 mm Fixed	-
GP-8	GoPro Hero 4	120		
GP-23	GoPro Hero 7	240		
GP-24	GoPro Hero 7	240		
PAN-3	Panasonic HC-V770	120		
PAN-4	Panasonic HC-V770	120		
PAN-5	Panasonic HC-VX981	120		
PAN-6	Panasonic HC-VX981	120		

Figure 22. Camera Locations, Speeds, and Lens Settings, Test No. UCSS-2

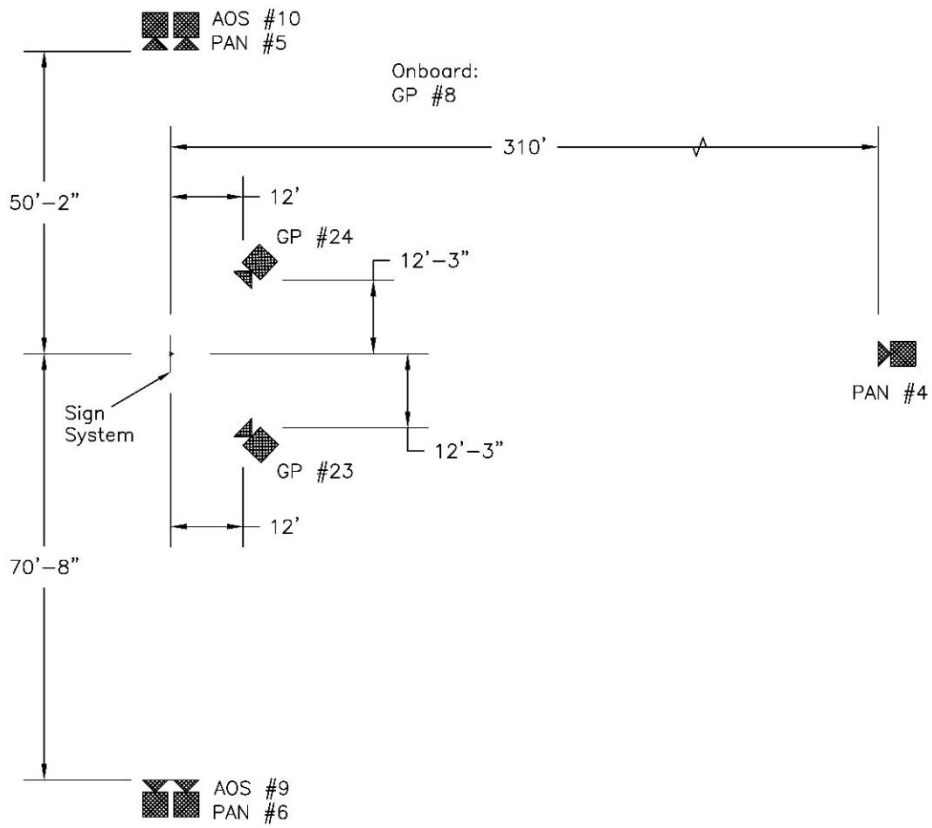

No.	Type	Operating Speed (frames/sec)	Lens	Lens Setting
AOS-9	AOS TRI-VIT	1000	Fujinon 50 mm	-
AOS-10	AOS TRI-VIT	1000	Fujinon 35 mm	-
GP-8	GoPro Hero 4	120		
GP-23	GoPro Hero 7	240		
GP-24	GoPro Hero 7	240		
PAN-4	Panasonic HC-V770	120		
PAN-5	Panasonic HC-VX981	120		
PAN-6	Panasonic HC-VX981	120		

Figure 23. Camera Locations, Speeds, and Lens Settings, Test No. UCSS-3

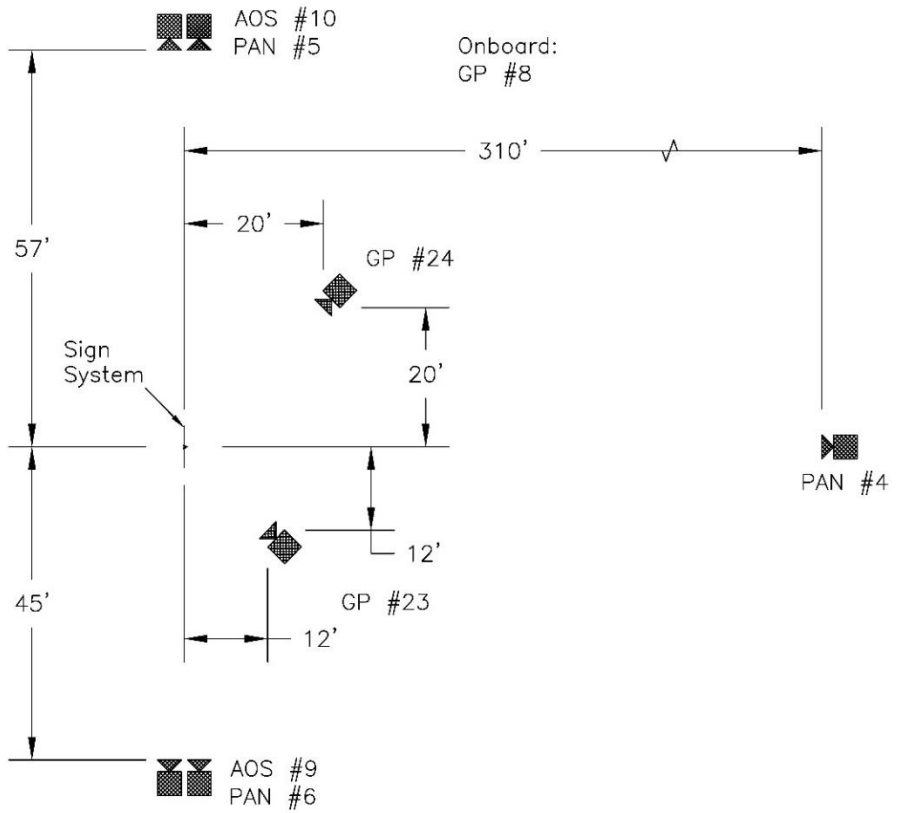

No.	Type	Operating Speed (frames/sec)	Lens	Lens Setting
AOS-9	AOS TRI-VIT	1000	Fujinon 35 mm Fixed	-
AOS-10	AOS TRI-VIT	1000	Fujinon 50 mm Fixed	-
GP-8	GoPro Hero 4	120		
GP-23	GoPro Hero 7	240		
GP-24	GoPro Hero 7	240		
PAN-4	Panasonic HC-V770	120		
PAN-5	Panasonic HC-VX981	120		
PAN-6	Panasonic HC-VX981	120		

Figure 24. Camera Locations, Speeds, and Lens Settings, Test No. UCSS-4

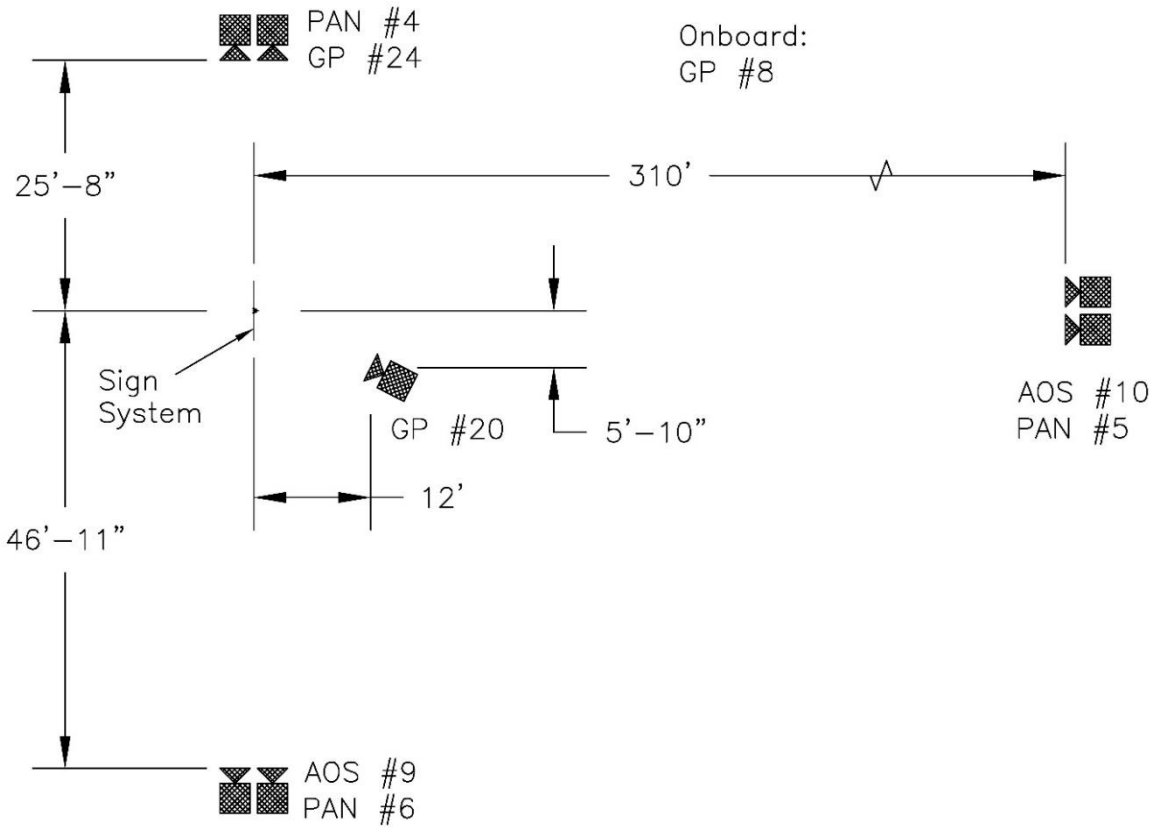

No.	Type	Operating Speed (frames/sec)	Lens	Lens Setting
AOS-9	AOS TRI-VIT	1000	Fujinon 35 mm Fixed	-
AOS-10	AOS TRI-VIT	500	100 mm Fixed	-
GP-8	GoPro Hero 4	120		
GP-20	GoPro Hero 6	240		
GP-24	GoPro Hero 7	240		
PAN-4	Panasonic HC-V770	120		
PAN-5	Panasonic HC-VX981	120		
PAN-6	Panasonic HC-VX981	120		

Figure 25. Camera Locations, Speeds, and Lens Settings, Test No. UCSS-5

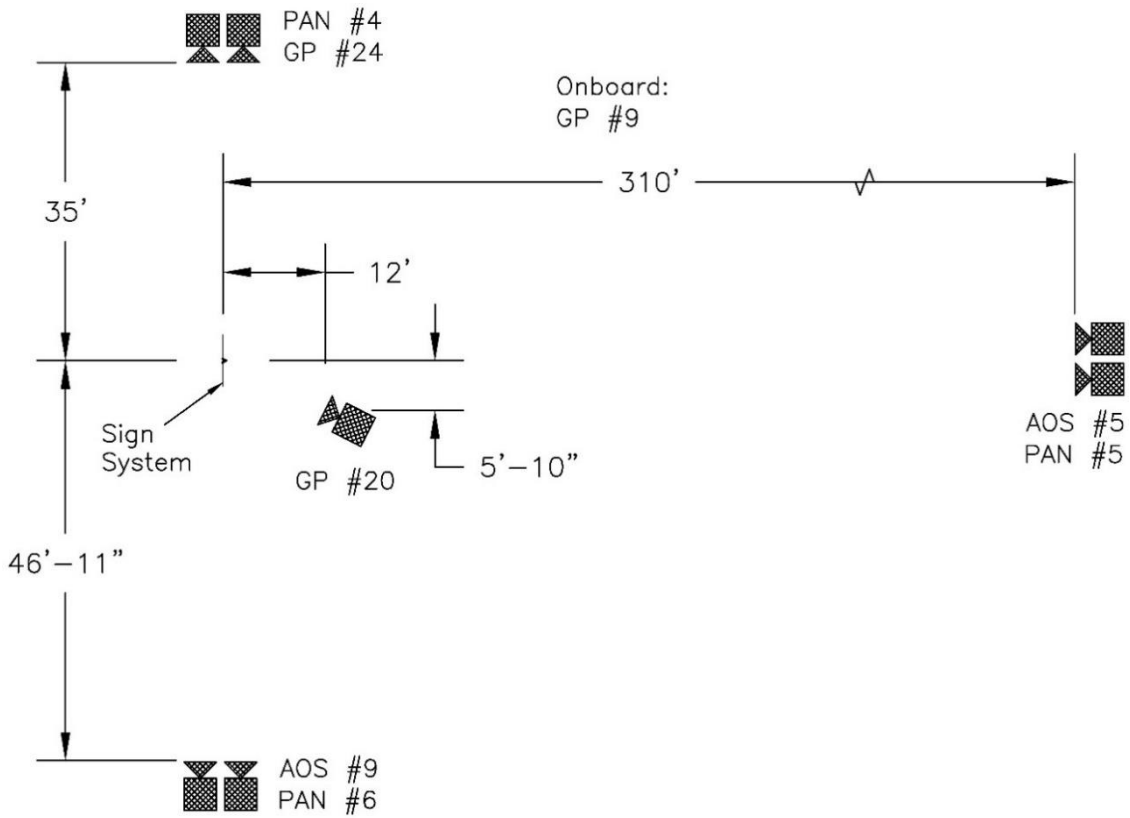

No.	Type	Operating Speed (frames/sec)	Lens	Lens Setting
AOS-5	AOS X-PRI	500	100 mm Fixed	-
AOS-9	AOS TRI-VIT	1000	Fujinon 35 mm Fixed	-
GP-9	GoPro Hero 4	120		
GP-20	GoPro Hero 6	240		
GP-24	GoPro Hero 7	240		
PAN-4	Panasonic HC-V770	120		
PAN-5	Panasonic HC-VX981	120		
PAN-6	Panasonic HC-VX981	120		

Figure 26. Camera Locations, Speeds, and Lens Settings, Test No. UCSS-6

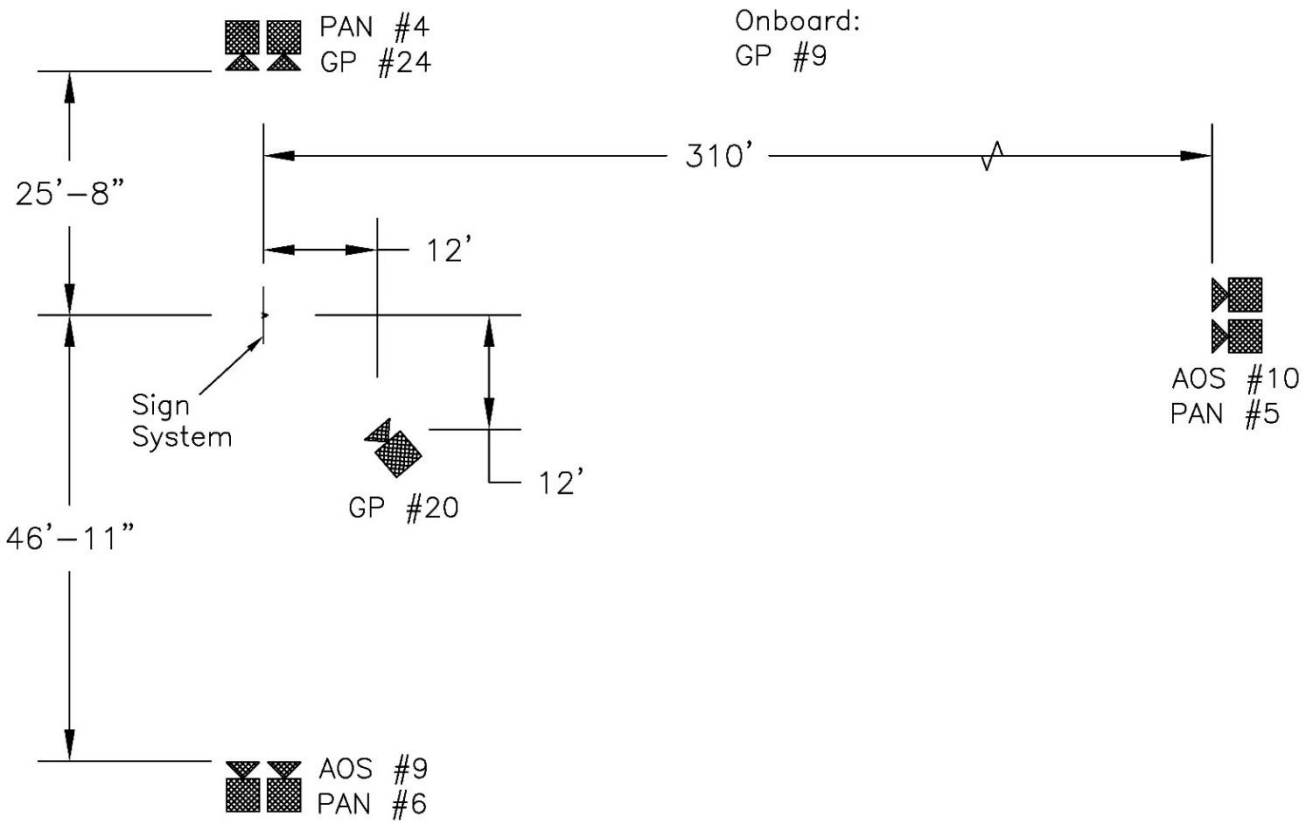

No.	Type	Operating Speed (frames/sec)	Lens	Lens Setting
AOS-9	AOS TRI-VIT	1000	Fujinon 50 mm Fixed	-
AOS-10	AOS TRI-VIT	500	100 mm Fixed	-
GP-9	GoPro Hero 4	120		
GP-20	GoPro Hero 6	240		
GP-24	GoPro Hero 7	240		
PAN-4	Panasonic HC-V770	120		
PAN-5	Panasonic HC-VX981	120		
PAN-6	Panasonic HC-VX981	120		

Figure 27. Camera Locations, Speeds, and Lens Settings, Test No. UCSS-7

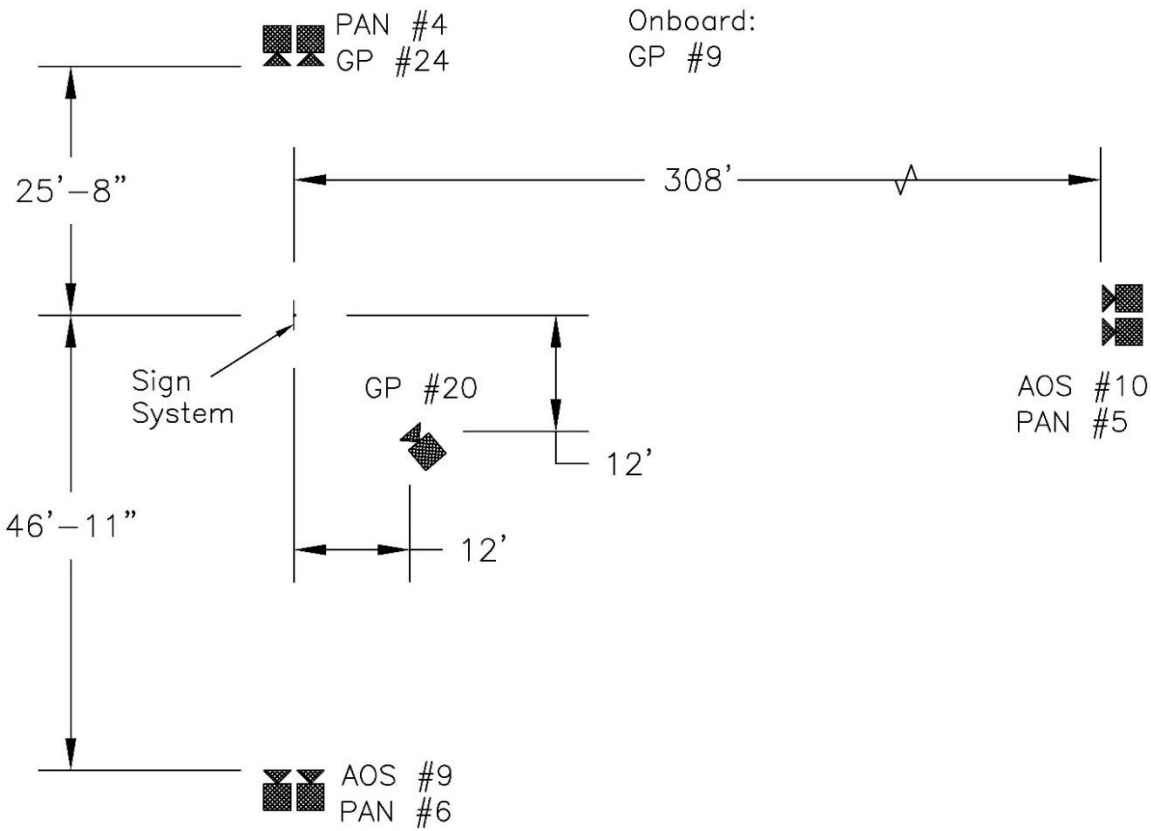

No.	Type	Operating Speed (frames/sec)	Lens	Lens Setting
AOS-9	AOS TRI-VIT	1000	Fujinon 35 mm Fixed	-
AOS-10	AOS TRI-VIT	500	100 mm Fixed	-
GP-9	GoPro Hero 4	120		
GP-20	GoPro Hero 6	240		
GP-24	GoPro Hero 7	240		
PAN-4	Panasonic HC-V770	120		
PAN-5	Panasonic HC-VX981	120		
PAN-6	Panasonic HC-VX981	120		

Figure 28. Camera Locations, Speeds, and Lens Settings, Test No. UCSS-8

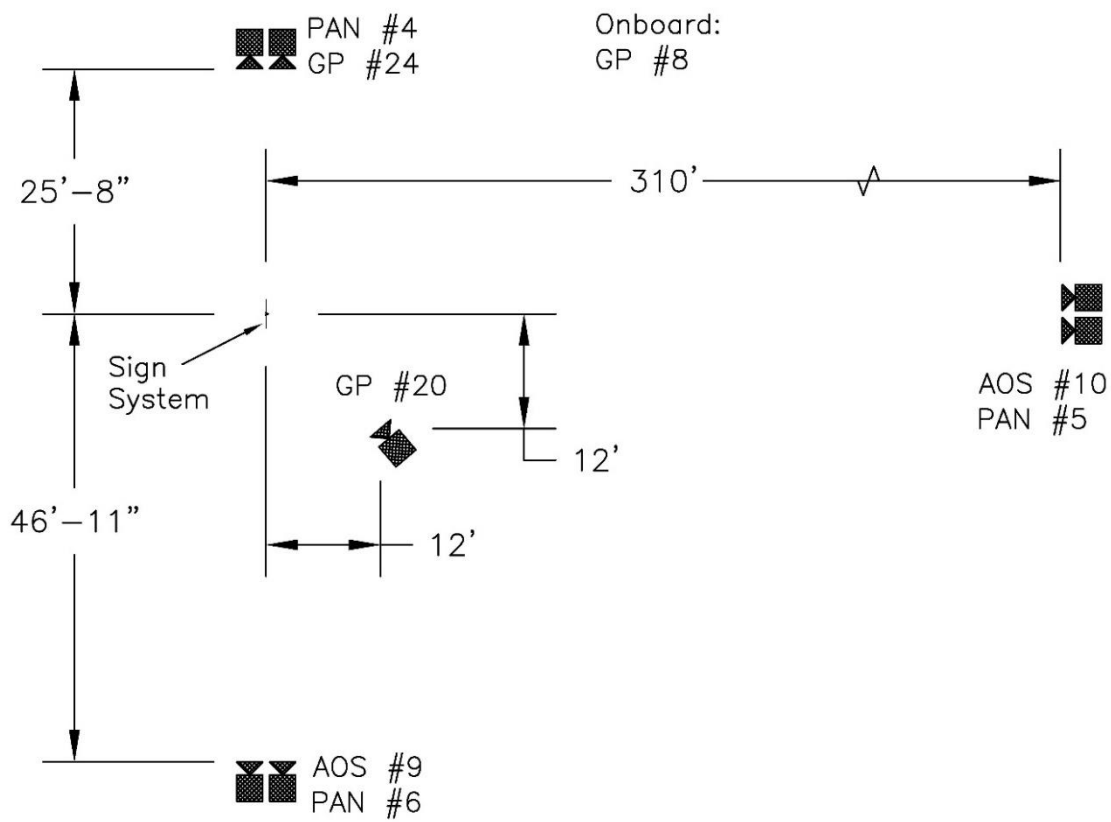

No.	Type	Operating Speed (frames/sec)	Lens	Lens Setting
AOS-9	AOS TRI-VIT	1000	Fujinon 35 mm Fixed	-
AOS-10	AOS TRI-VIT	500	100 mm Fixed	-
GP-8	GoPro Hero 4	120		
GP-20	GoPro Hero 6	240		
GP-24	GoPro Hero 7	240		
PAN-4	Panasonic HC-V770	120		
PAN-5	Panasonic HC-VX981	120		
PAN-6	Panasonic HC-VX981	120		

Figure 29. Camera Locations, Speeds, and Lens Settings, Test No. UCSS-9

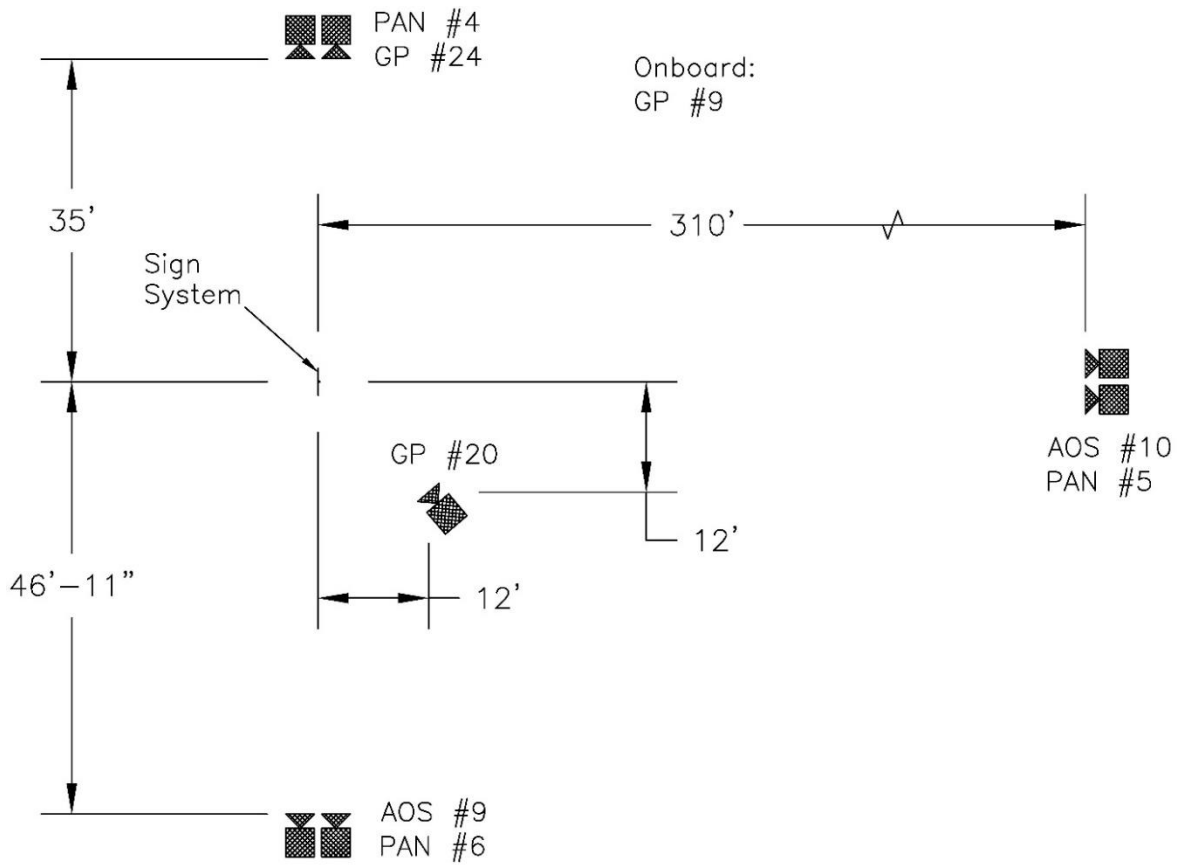

No.	Type	Operating Speed (frames/sec)	Lens	Lens Setting
AOS-9	AOS TRI-VIT	1000	Fujinon 35 mm Fixed	-
AOS-10	AOS TRI-VIT	500	100 mm Fixed	-
GP-20	GoPro Hero 6	240		
GP-24	GoPro Hero 7	-		
PAN-4	Panasonic HC-V770	120		
PAN-5	Panasonic HC-VX981	120		
PAN-6	Panasonic HC-VX981	120		

Figure 30. Camera Locations, Speeds, and Lens Settings, Test No. UCSS-10

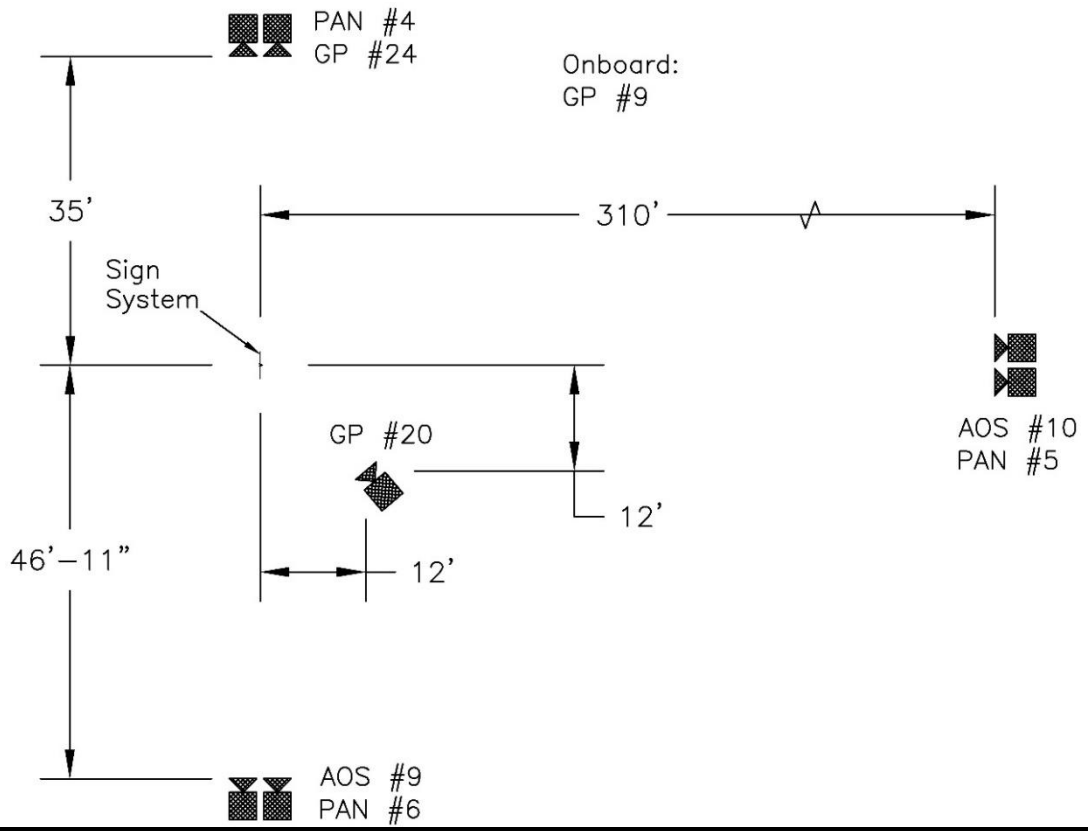

No.	Type	Operating Speed (frames/sec)	Lens	Lens Setting
AOS-9	AOS TRI-VIT	1000	Fujinon 35 mm Fixed	-
AOS-10	AOS TRI-VIT	500	100 mm Fixed	-
GP-9	GoPro Hero 4	120		
GP-20	GoPro Hero 6	120		
GP-24	GoPro Hero 7	240		
PAN-4	Panasonic HC-V770	120		
PAN-5	Panasonic HC-VX981	120		
PAN-6	Panasonic HC-VX981	120		

Figure 31. Camera Locations, Speeds, and Lens Settings, Test No. UCSS-11

5.5 Surrogate, Reusable, 1100C Test Vehicle Repairs

When the surrogate, reusable test vehicle selected for use in this research study required repairs, the research team considered how to perform repairs which would maximize consistency with unmodified, structurally-intact vehicles. The most commonly-damaged components in this research study were the bumper load cartridge, bumper shroud, hood, windshield, roof, and rear window. Minor damage, mostly consisting of scraping, was noted on the undercarriage. Undercarriage damage was monitored and reported but did not violate occupant compartment deformation limits in any test. Undercarriage damage was typically limited such that deflection measurements were within the measurement error tolerances.

For bumper cartridge, bumper shroud, and hood components, if permanent deflections were greater than ¼ in. after a test, the components were replaced with OEM hardware. The bumper cartridge, bumper shroud, and hood were attached at the original equipment mounting locations and using hardware consistent with OEM production.

Both the front windshield and the rear window were replaced if cracking was observed. Because both the front windshield and rear window are typically mounted to the vehicle using an adhesive, a “quick-exchange” system using a series of bolted-on steel clips were adopted to hold the windshield in the original mounting position and provide torsional stability, shear resistance, and geometric consistency. However, new adhesive was not applied to the glass. Therefore, it is anticipated that the windshield and rear window were likely slightly weaker than unmodified hardware, which would lead to a more demanding evaluation of the tested systems.

Roof repairs were completed using a steel roller and rubber mallets to replace the damaged portions of the roof to near-pristine condition. To confirm the geometry of the roof was consistent with the undeformed geometry, lidar scans were collected of the pristine vehicle, and before and after every repair, to compare the vehicle geometry. The roof damage led to incremental creases formed in the sheet metal. These creases induced residual elastic and plastic strains in the sheet metal, but had the tendency to weaken the roof section and make it more susceptible to subsequent damage. As with the windshield, the weakened roof section was believed to be a more critical evaluation of the strength of the thin sheet metal roof panel, and thus results were believed to be comparable or slightly more severe than an unmodified roof panel.

6 VALIDATION OF SURROGATE, REUSABLE, 1100C TEST VEHICLE

6.1 Introduction

Before conducting research and development testing using the surrogate, reusable, 1100C test vehicle, it was necessary to confirm that the behavior of the surrogate, reusable, 1100C test vehicle was representative of full-scale 1100C vehicle behavior during breakaway sign support impacts. To confirm the behavior of the surrogate, reusable, 1100C test vehicle, three component tests (test nos. UCSS-2, UCSS-3, and UCSS-4) were conducted on breakaway sign support installations identical to those full-scale crash tested during test nos. UCSS-1a, UCSS-1b, and UCSS-1c, as detailed in the Phase Ia report [6]. The surrogate, reusable, 1100C test vehicle results were compared to the full-scale crash test results of test nos. UCSS-1a, UCSS-1b, and UCSS-1c, for each respective system [6]. The details of each system evaluated during the validation effort are shown in Table 4.

Table 4. Summary of Breakaway Sign Supports for Validation Comparison

Test No.	Test Vehicle	Post Weight, lb/ft	Sign Panel Size, in.	Lower Panel Height, ft	Post Yield Strength, ksi	Splice Configuration
UCSS-1a	1100C	1.12	36 x 12 x 0.08	4	80	None
UCSS-2	Surrogate 1100C					
UCSS-1b	1100C	4	36 x 36 x 0.08	7	60	8-in. overlap at ground line
UCSS-3	Surrogate 1100C					
UCSS-1c	1100C	4	36 x 36 x 0.08	5	60	8-in. overlap at ground line
UCSS-4	Surrogate 1100C					

The sign support reactions, including rotation speed and fracture location, test article contact locations on the surrogate, reusable, 1100C test vehicle, and change in speed and energy of the surrogate, reusable, 1100C test vehicle, were recorded. These reactions were used to confirm that the surrogate, reusable, 1100C test vehicle could reliably reproduce the sign support behavior of an unmodified, MASH-compliant, 1100C small car. Details and results from the three surrogate vehicle tests on breakaway sign supports are provided below, followed by a comparison analysis between the surrogate, reusable, 1100C test vehicle and MASH 1100C small car.

6.2 Surrogate, Reusable, 1100C Test Vehicle Test No. UCSS-2

6.2.1 Test No. UCSS-2 Design Details

The test installation for test no. UCSS-2 consisted of a single U-channel sign support, as shown in Figures 32 through 37. The test article and test conditions were comparable to test no. UCSS-1, system no. 1 (i.e., test no. UCSS-1a) [6]. Photographs of the test installation are shown in Figure 38. Material specifications, mill certifications, and certificates of conformity for the system materials are shown in Appendix B.

The sign support was constructed with 1.12-lb/ft ASTM A499 Grade 60 U-channel, which supported a 36-in. x 12-in. x 0.08-in. aluminum sign panel with reflective sheeting. The sign panel was installed at a height of 4 ft measured from the bottom of the sign panel to the ground line. The sign support for test no. UCSS-2 comprised a single 96-in. long U-channel sign post directly embedded into coarse, crushed limestone (well-graded gravel) at a depth of 24 in.

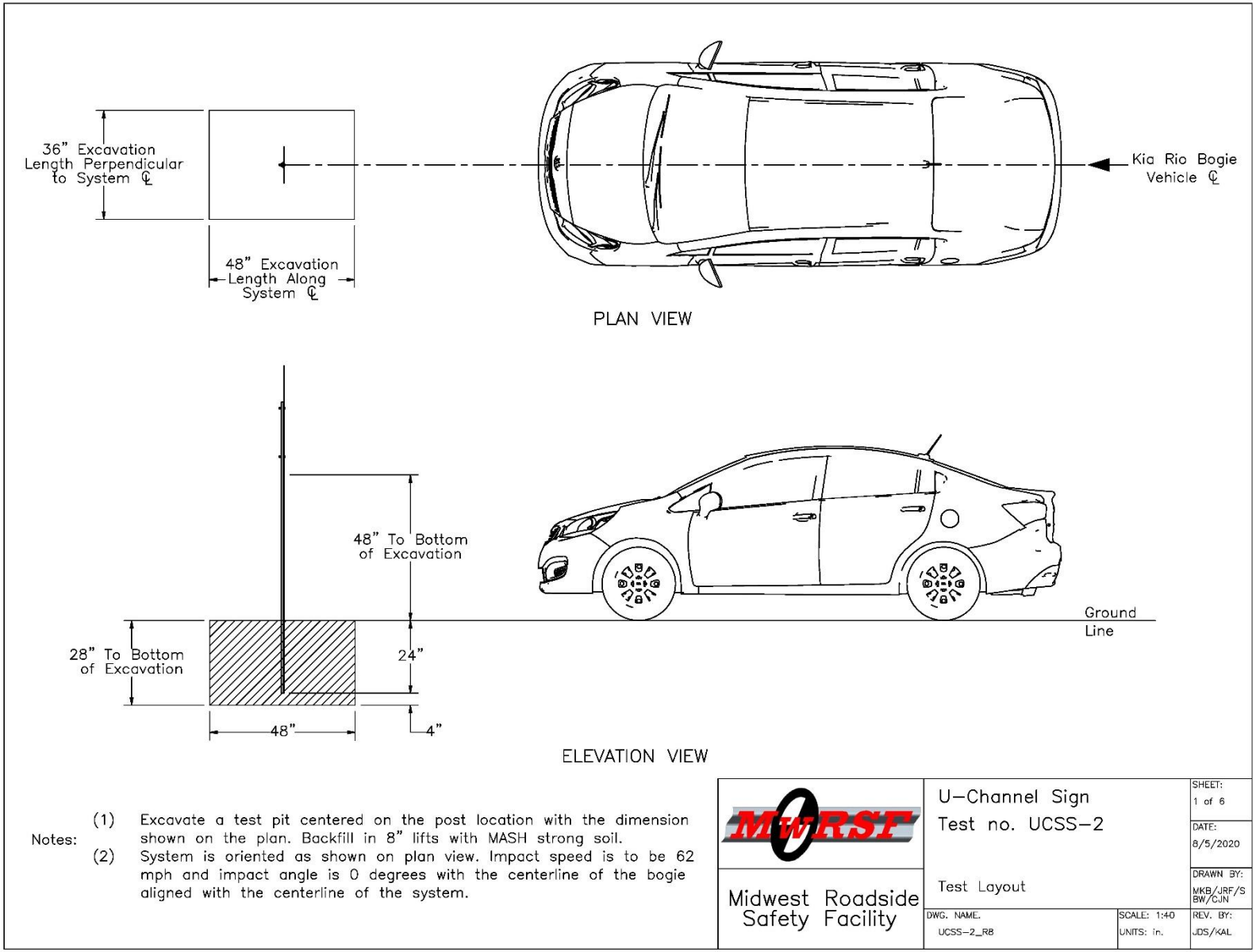

Figure 32. Test Installation Layout, Test No. UCSS-2

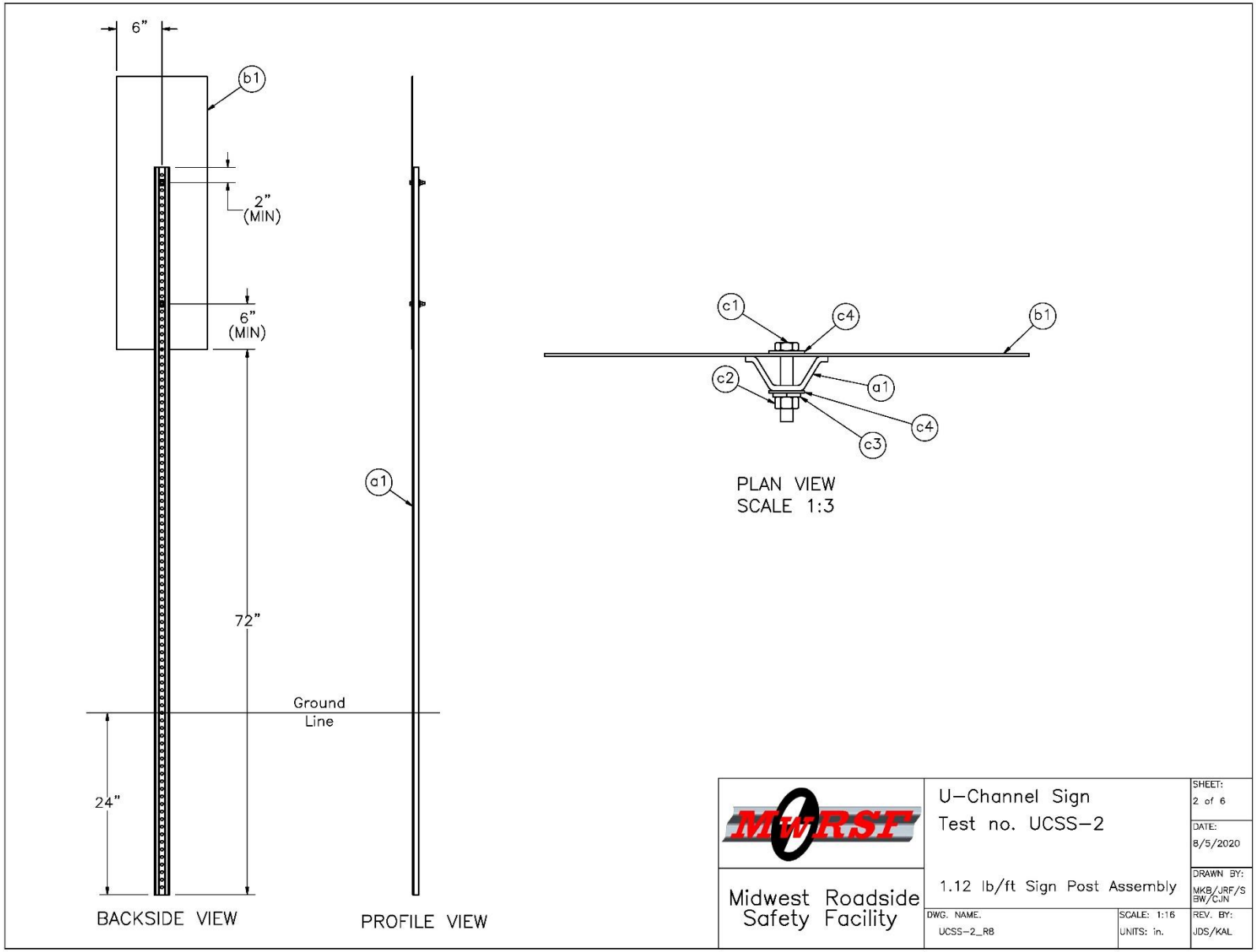

Figure 33. Sign Post Assembly, Test No. UCSS-2

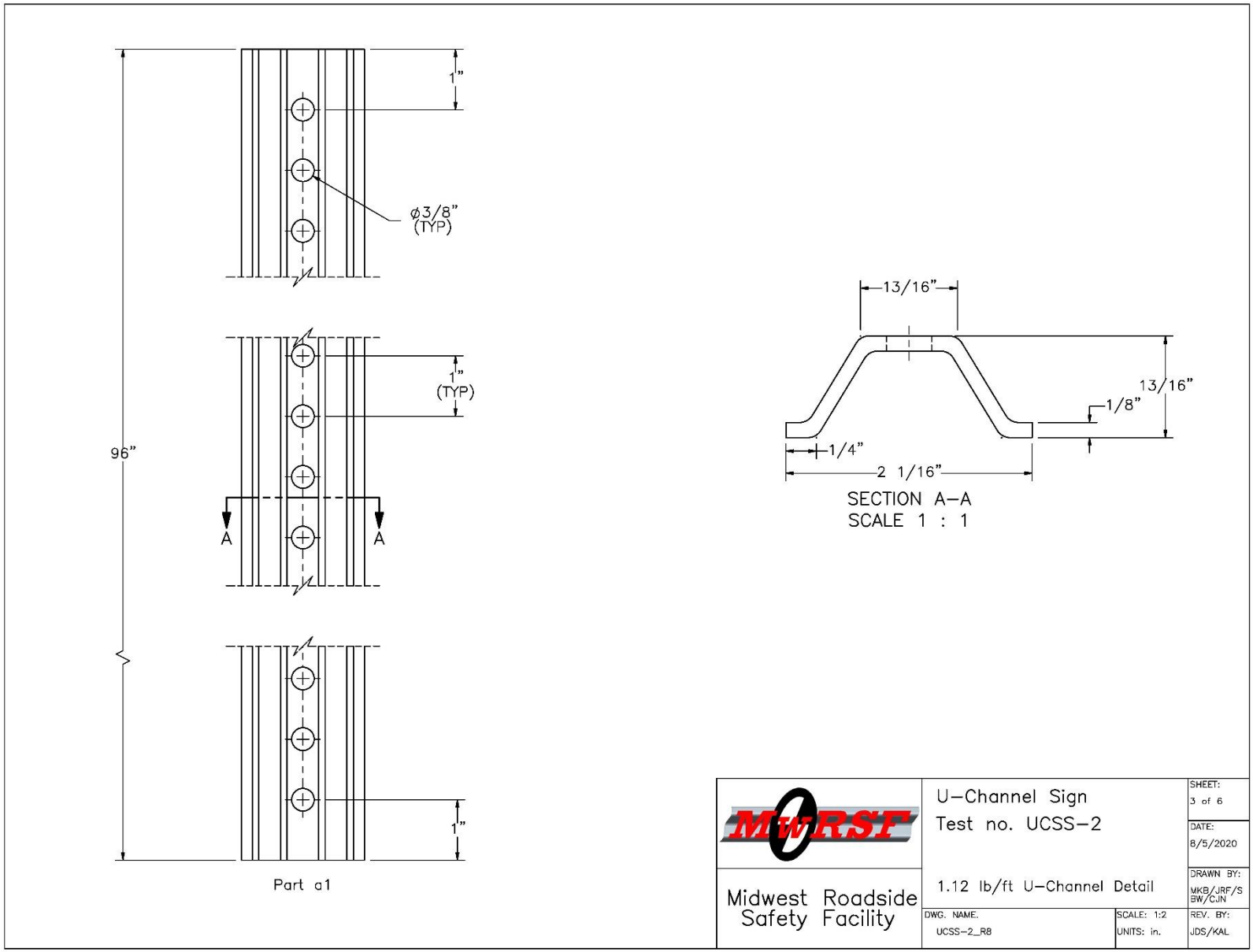

Figure 34. U-Channel Detail, Test No. UCSS-2

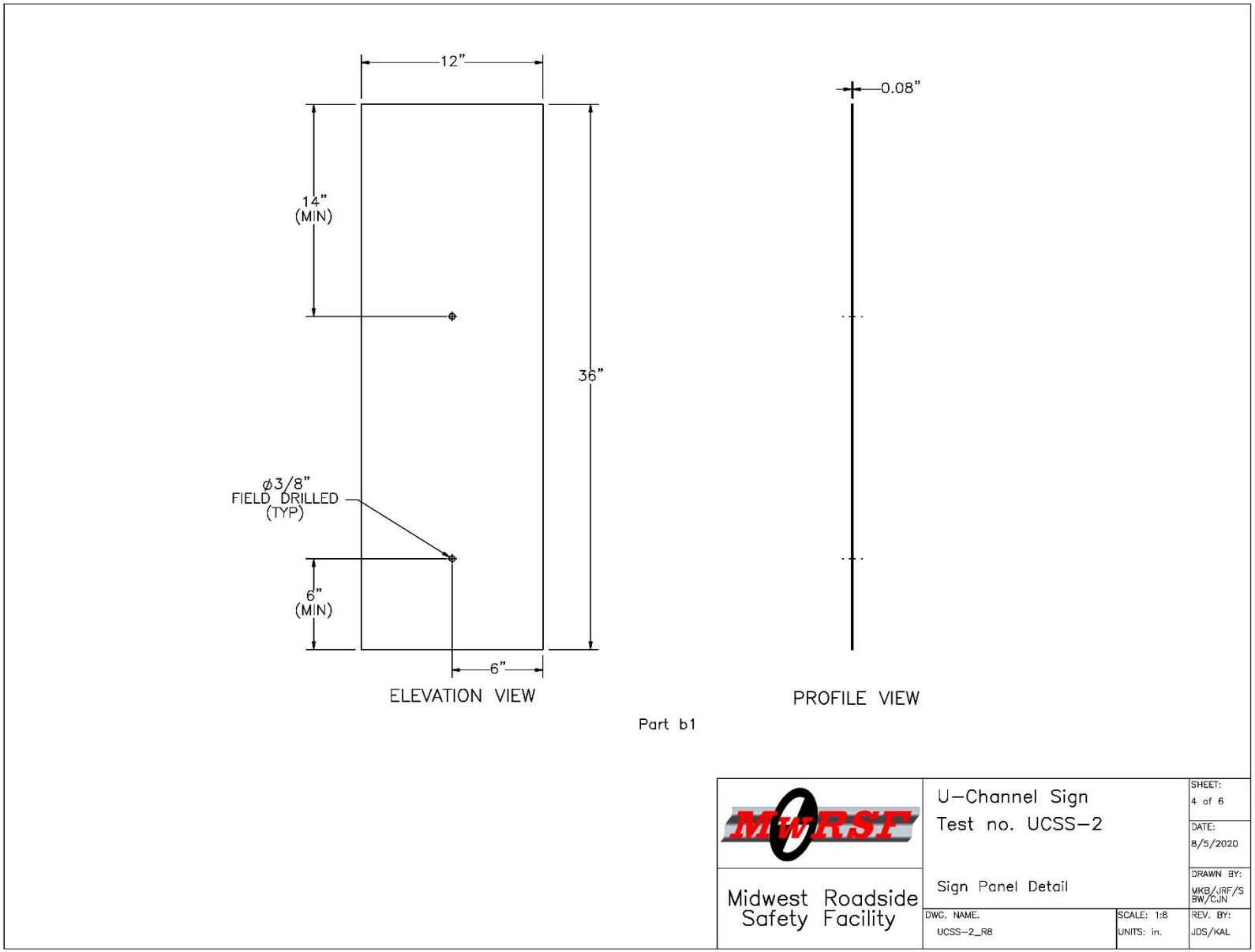

Figure 35. Sign Panel Detail, Test No. UCSS-2

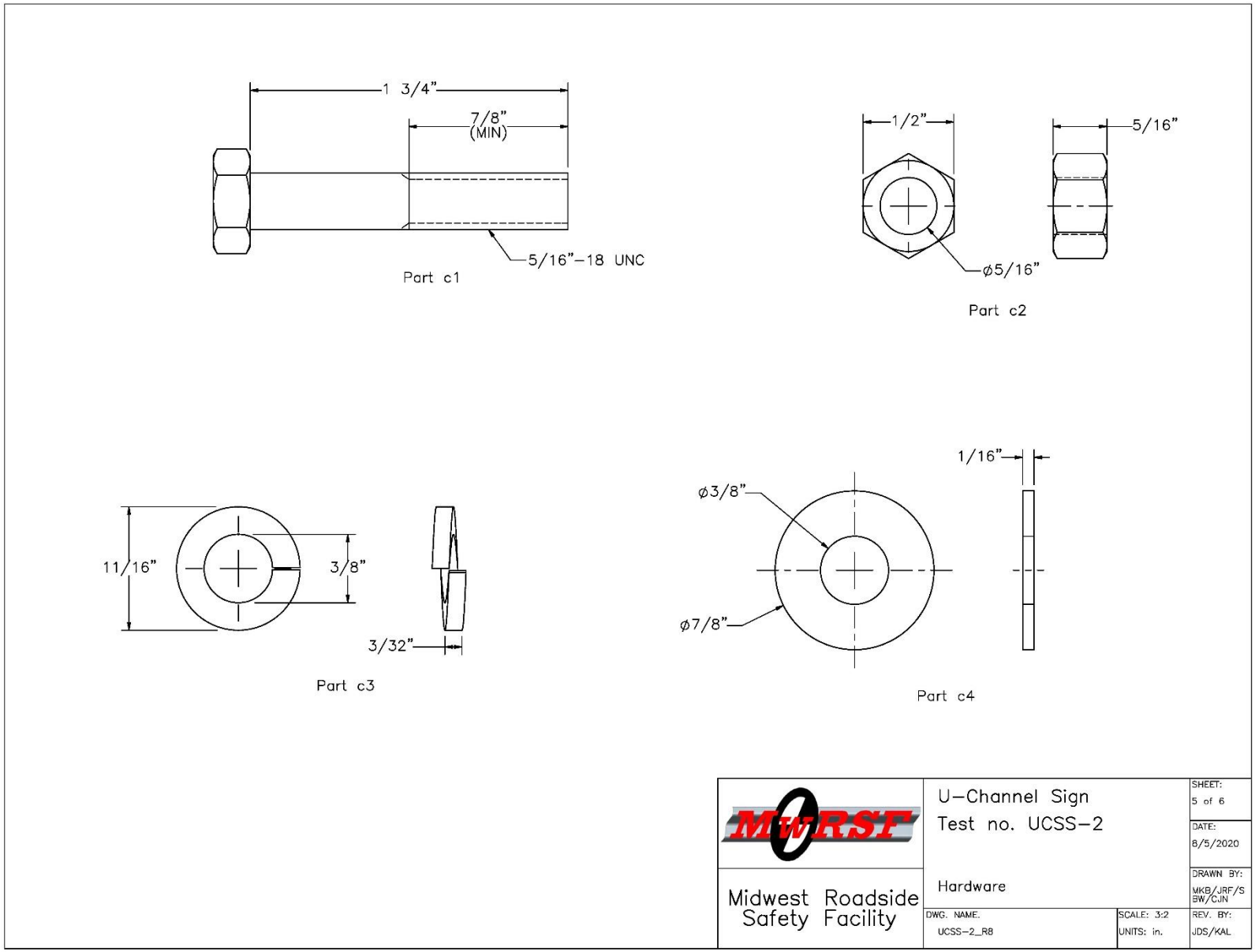

Figure 36. Hardware, Test No. UCSS-2

Item No.	QTY.	Description	Material Specification	Treatment Specification	Hardware Guide
a1	1	1.12 lb/ft U–Channel Sign Post, 96" Long	ASTM A499 Gr. 60 Min. Yield = 80 ksi	ASTM A123	–
b1	1	36"x12"x0.08" Sign with Reflective Sheeting	Aluminum Alloy 5052 or Similar	–	–
c1	2	5/16"–18 UNC, 1 3/4" Long Hex Bolt	SAE J429 Gr. 5 or 9	Fe/Zn 3AN per ASTM F1941	FBX08b
c2	2	5/16"–18 UNC Heavy Hex Nut	SAE J995 Gr. 5 or 9	Fe/Zn 3AN per ASTM F1941	FNX08b
c3	2	3/8" Dia. Lock Washer	Low Carbon Steel	Fe/Zn 3AN per ASTM F1941	–
c4	4	5/16" Dia. Plain Round Washer	Low Carbon Steel	Fe/Zn 3AN per ASTM F1941	FWC08a

MwRSF Midwest Roadside Safety Facility	U–Channel Sign Test no. UCSS–2 Bill of Materials		SHEET: 6 of 6 DATE: 8/5/2020 DRAWN BY: MKB/JRF/SBW/CJN
	DWG. NAME. UCSS–2_R8	SCALE: 1:192 UNITS: in.	REV. BY: JDS/KAL

Figure 37. Bill of Materials, Test No. UCSS-2

Figure 38. Sign Installation, Test No. UCSS-2

6.2.2 Weather Conditions

Test no. UCSS-2 was conducted on August 4, 2020 at approximately 12:00 p.m. The weather conditions as per the National Oceanic and Atmospheric Administration (station 14939/LNK) were reported and are shown in Table 5.

Table 5. Weather Conditions, Test No. UCSS-2

Temperature	73° F
Humidity	46%
Wind Speed	13 mph
Wind Direction	220° from True North
Sky Conditions	Sunny
Visibility	9.9 Statute Miles
Pavement Surface	Dry
Previous 3-Day Precipitation	0.00 in.
Previous 7-Day Precipitation	0.26 in.
Soil Moisture Content	Not Available

6.2.3 Test Description

The 2,432-lb surrogate, reusable, 1100C test vehicle impacted the single, U-channel sign support installation at a speed of 63.6 mph and at an angle of 0 degrees. Impact occurred at the centerline of the surrogate vehicle's front bumper, as shown in Figure 39. Following the impact with the sign installation, the surrogate vehicle collided with a temporary barrier downstream from the sign installation before it came to rest. A detailed description of the sequential impact events is contained in Table 6. Documentary photographs of the crash test are shown in Figures 40 and 41.

Figure 39. Impact Location, Test No. UCSS-2

Table 6. Sequential Description of Impact Events, Test No. UCSS-2

TIME (sec)	EVENT
0.000	Vehicle's front bumper contacted bottom of sign support at 63.6 mph and 0 degrees.
0.002	Sign support deformed around vehicle's front bumper.
0.024	Sign support contacted front edge of vehicle hood.
0.032	Sign support fractured 5 in. from bottom of sign panel.
0.038	Sign panel contacted vehicle's windshield and hood.
0.158	Vehicle cleared sign support stub traveling at 62.4 mph.
0.275	Sign panel lost contact with vehicle's windshield.

Figure 40. Documentary Photographs, Test No. UCSS-2

Figure 41. Additional Documentary Photographs, Test No. UCSS-2

6.2.4 Sign Panel and U-Channel Support Damage

System damage is shown in Figure 42. The system was impacted 23¾ in. above ground at the surrogate, reusable, 1100C test vehicle bumper height. The sign support yielded and fractured approximately 5 in. from the bottom of the sign panel. The lower section of the U-channel sign support remained embedded in the soil and was deformed downstream. The sign panel was deformed and scrapes were observed on the front face of the sign panel.

6.2.5 Surrogate, Reusable, 1100C Test Vehicle Damage

The surrogate, reusable, 1100C test vehicle sustained minor damage, as shown in Figure 43. Damage consisted of minor deformation and contact marks at the centerline of the front bumper where impact occurred. Contact marks were also observed on the hood of the vehicle. The center of the windshield was cracked where the sign panel impact occurred. While undercarriage scraping contact with the sign support occurred, excessive occupant compartment deformation did not occur, and the limits established in MASH 2016 for the various areas of the occupant compartment were not violated.

After the surrogate, reusable, 1100C test vehicle exited the system and brakes were applied, the vehicle contacted a concrete protection barrier, which was on the boundary of the test area to control the vehicle trajectory. As a result, the right-front wheel assembly and right-front fender were deformed. Following test no. UCSS-2 and prior to test no. UCSS-3, the vehicle's windshield was replaced, and the right-front suspension was repaired.

Figure 42. Sign Installation Damage, Test No. UCSS-2

Figure 43. Vehicle Damage, Test No. UCSS-2

6.2.6 Occupant Risk

The calculated occupant impact velocities (OIVs) and maximum 0.010-sec average occupant ridedown accelerations (ORAs) in both the longitudinal and lateral directions are shown in Table 7. It is important to note that in the test, the impulse on the vehicle was relatively small and of short duration. Thus, x and y in the flail-space model were less than 2 ft and 1 ft, respectively, during the period when the vehicle was in contact with the system. As specified in Section A5.5.2 of MASH 2016, in such cases, it was recommended that the OIV be set equal to the vehicle's change in velocity that occurred during contact with the test article, or parts thereof [1]. If parts of the test article remain with the vehicle after impact, the vehicle's change in velocity should be computed at the time the vehicle clears the footing or foundation of the test article. For test no. UCSS-2, the OIV, or in this case, the vehicle change in velocity, was reported when the vehicle lost contact with the test article. Note that the OIVs and ORAs were within suggested limits, as provided in MASH 2016. The calculated THIV, PHD, and ASI values are also shown in Table 7.

Table 7. Summary of OIV, ORA, THIV, PHD, and ASI Values, Test No. UCSS-2

Evaluation Criteria		Transducer		MASH 2016 Limits
		SLICE-1 (primary)	SLICE-2	
OIV ft/s	Longitudinal	-0.43	-0.50	±16
	Lateral	-1.13	-1.17	±16
ORA g's	Longitudinal	N/A	N/A	±20.49
	Lateral	N/A	N/A	±20.49
Maximum Angular Displacement deg.	Roll	-0.3	0.5	±75
	Pitch	-0.3	-0.3	±75
	Yaw	0.1	0.2	not required
THIV ft/s		0.00	0.00	not required
PHD g's		0.00	0.00	not required
ASI		0.10	0.11	not required

Note: The vehicle cleared the test article foundation at 0.158 sec after impact for test no. UCSS-2, which was used to determine vehicle change in velocity, denoted as OIV.

N/A = Not Applicable

6.2.7 Discussion

The analysis of the test results for test no. UCSS-2 showed that the system readily activated in a predictable manner when impacted by the surrogate, reusable, 1100C test vehicle. A summary of the test results and sequential photographs are shown in Figure 44. Detached elements, fragments, or other debris from the test article did not penetrate or show potential for penetrating the occupant compartment, or present an undue hazard to other traffic, pedestrians, or work-zone personnel. Deformations of, or intrusions into, the occupant compartment that could have caused serious injury did not occur. Vehicle roll, pitch, and yaw angular displacements were deemed acceptable, because they did not adversely influence occupant risk nor cause rollover. Therefore, test no. UCSS-2 is anticipated to be acceptable according to the MASH 2016 safety performance criteria for test designation no. 3-61.

0.000 sec | 0.020 sec | 0.040 sec | 0.060 sec | 0.080 sec

- Test Agency ..... MwRSF
- Test Number UCSS-2
- Date 8/4/2020
- Representative MASH 2016 Test Designation No. 3-61
- Test Article ..... 4-ft tall, 1.12 lb/ft U-channel marker sign
- Key Component – Aluminum Sign Panel
  - Dimensions ..... 36 in. x 12 in.x 0.08 in.
  - Mounting Height (Bottom of Sign) ..... 4 ft
- Key Component – U-Channel Sign Support
  - Length ..... 96 in.
  - Embedment ..... 24 in.
- Soil Type ..... Coarse, crushed limestone (well-graded gravel)
- Vehicle Make /Model ..... Surrogate, Reusable, 1100C Test Vehicle
  - Curb ..... 2,480 lb
  - Test Inertial ..... 2,432 lb
  - Gross Static ..... 2,432 lb
- Impact Conditions
  - Speed ..... 63.6 mph
  - Angle ..... 0 deg.
  - Impact Location ..... Centerline of Front Bumper
- Kinetic Energy ..... 329.1 kip-ft > 288 kip-ft Limit from MASH 2016
- Exit Conditions
  - Speed ..... 62.4 mph
  - Angle ..... 0 deg.
- Vehicle Stability ..... Satisfactory
- Vehicle Stopping Distance ..... N/A
- Vehicle Damage ..... Minor
  - Parts in Need of Replacement .... Windshield, Right-Front Wheel Assembly (Repaired)
  - Maximum Interior Deformation ..... N/A

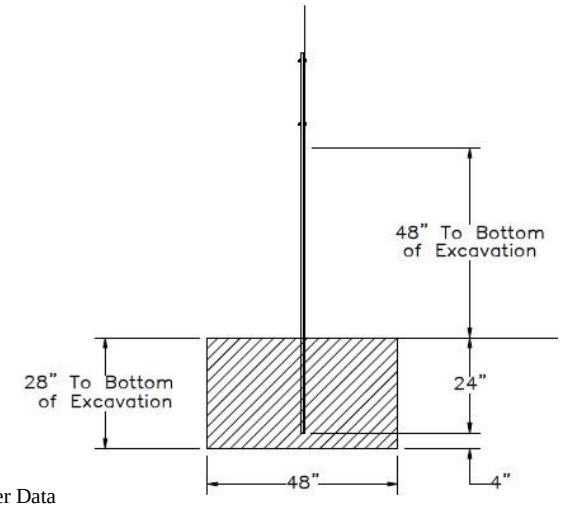

- Transducer Data

Evaluation Criteria		Transducer		MASH 2016 Limit
		SLICE-1 (primary)	SLICE-2	
OIV ft/s	Longitudinal	-0.43	-0.50	±16
	Lateral	-1.13	-1.17	±16
ORA g's	Longitudinal	N/A	N/A	N/A
	Lateral	N/A	N/A	N/A
Maximum Angular Displacement deg.	Roll	-0.3	0.5	±75
	Pitch	-0.3	-0.3	±75
	Yaw	0.1	0.2	not required

Figure 44. Summary of Representative MASH Test Results and Sequential Photographs, Test No. UCSS-2

6.3 Surrogate, Reusable, 1100C Test Vehicle Test No. UCSS-3

6.3.1 Test No. UCSS-3 Design Details

The test installation for test no. UCSS-3 consisted of a single, U-channel sign support, as shown in Figures 45 through 51. The test article and test conditions were comparable to test no. UCSS-1, system no. 2 (i.e., test no. UCSS-1b) [6]. Photographs of the test installation are shown in Figure 52. Material specifications, mill certifications, and certificates of conformity for the system materials are shown in Appendix C.

The sign support was constructed with 4-lb/ft ASTM A499 Grade 60 U-channel, which supported a 36-in. x 36-in. x 0.08-in. aluminum sign panel with reflective sheeting. The sign panel was installed at a height of 7 ft measured from the bottom of the sign panel to the ground line. The sign support for test no. UCSS-3 comprised a 120-in. long upper sign support attached to a 42-in. long anchor stub with a lap splice connection. The upper sign support and anchor stub were connected at the lap splice with two $^{5}/_{16}$-in. diameter x 2¼-in. long Grade 9 hex bolts, with ¾-in. diameter x ½-in. wide steel spacers placed between the two U-channel sections. The anchor stub was installed with a 38-in. embedment depth into coarse, crushed limestone (well-graded gravel).

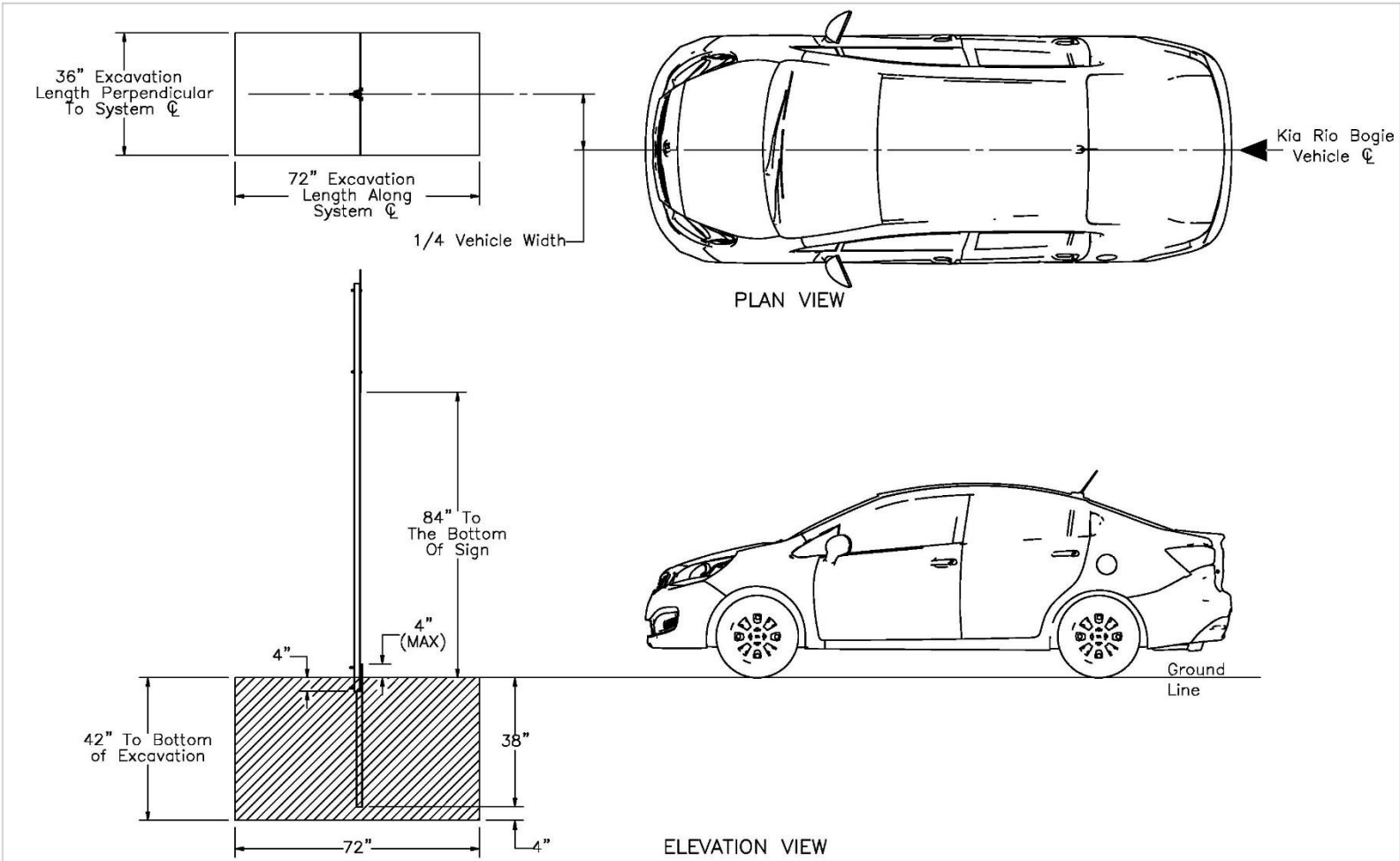

Notes: (1) Excavate a test pit centered on the post location with the dimension shown on the plan. Backfill in 8" lifts with coarse, crushed limestone (well–graded gravel).

(2) The impact speed is to be 62 mph and impact angle is 0 degrees with the right quarter point of the bogie aligned with the centerline of the system.

MwRSF Midwest Roadside Safety Facility	U–Channel Sign Test No. UCSS–3	SHEET: 1 of 7
		DATE: 4/1/2021
	Test Layout	DRAWN BY: MKB/JRF/SBW/GHR
	DWG. NAME. UCSS–3_R9 / SCALE: 1:40 / UNITS: in.	REV. BY: JDS/KAL

Figure 45. Test Installation Layout, Test No. UCSS-3

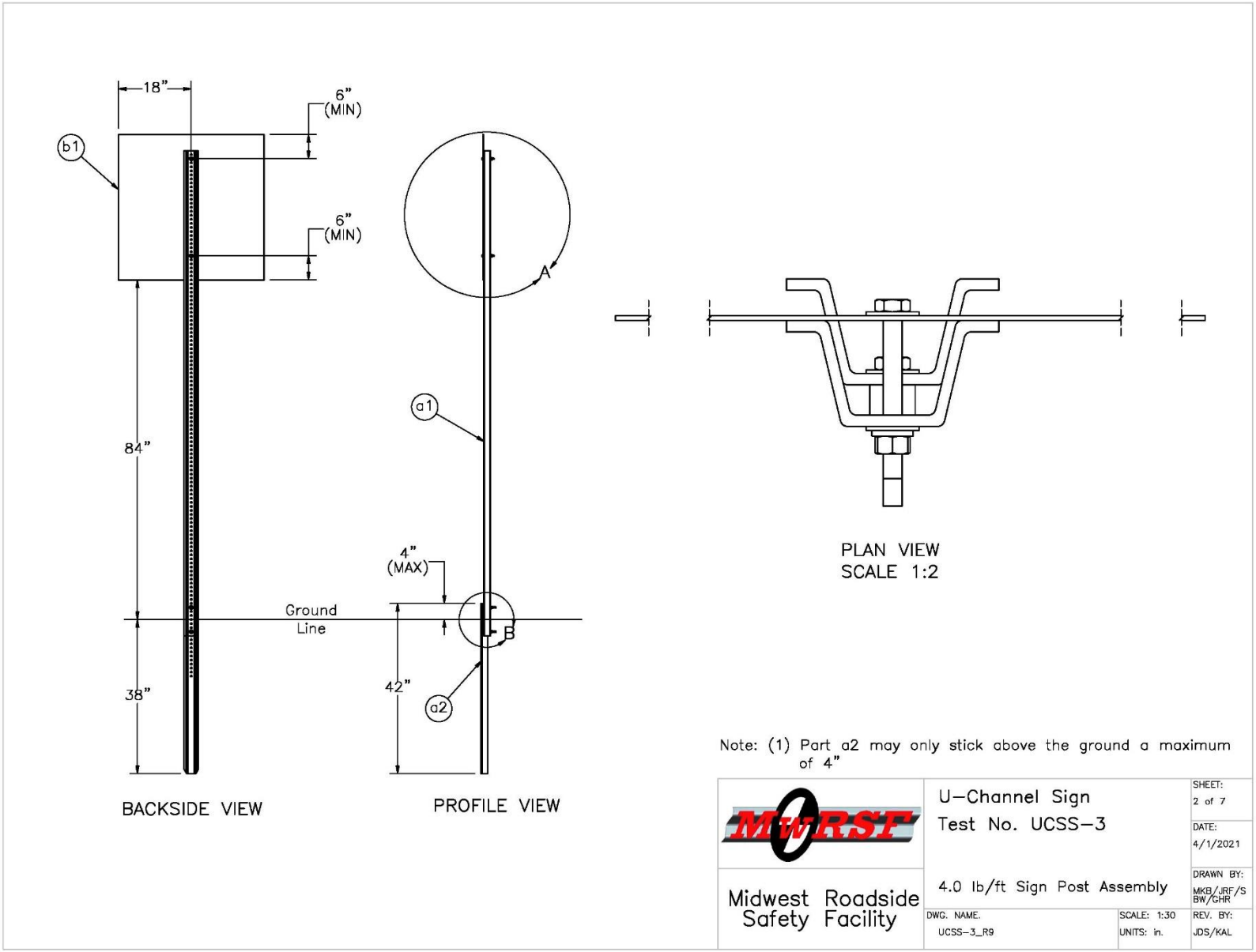

Figure 46. Sign Post Assembly, Test No. UCSS-3

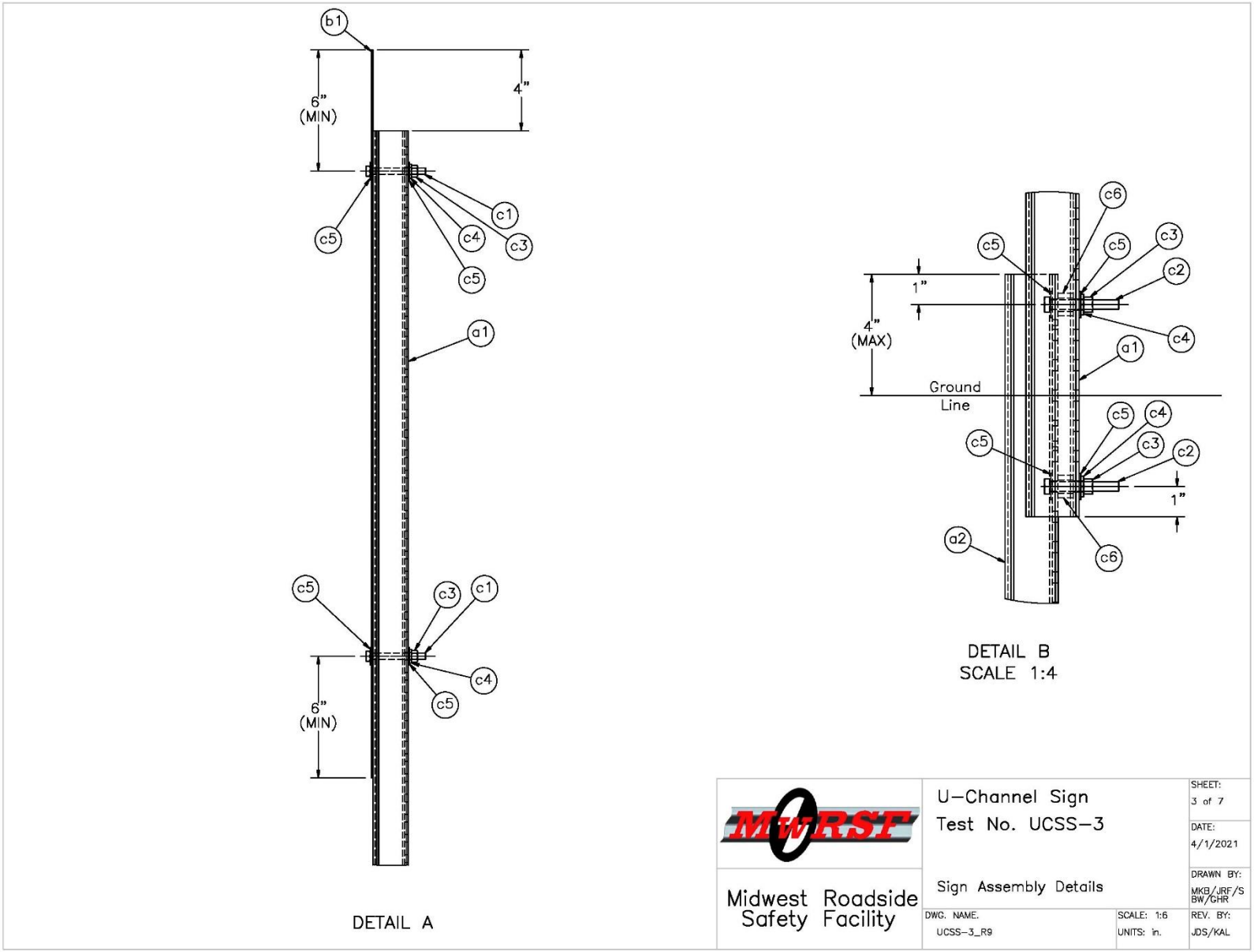

Figure 47. Sign Assembly Details, Test No. UCSS-3

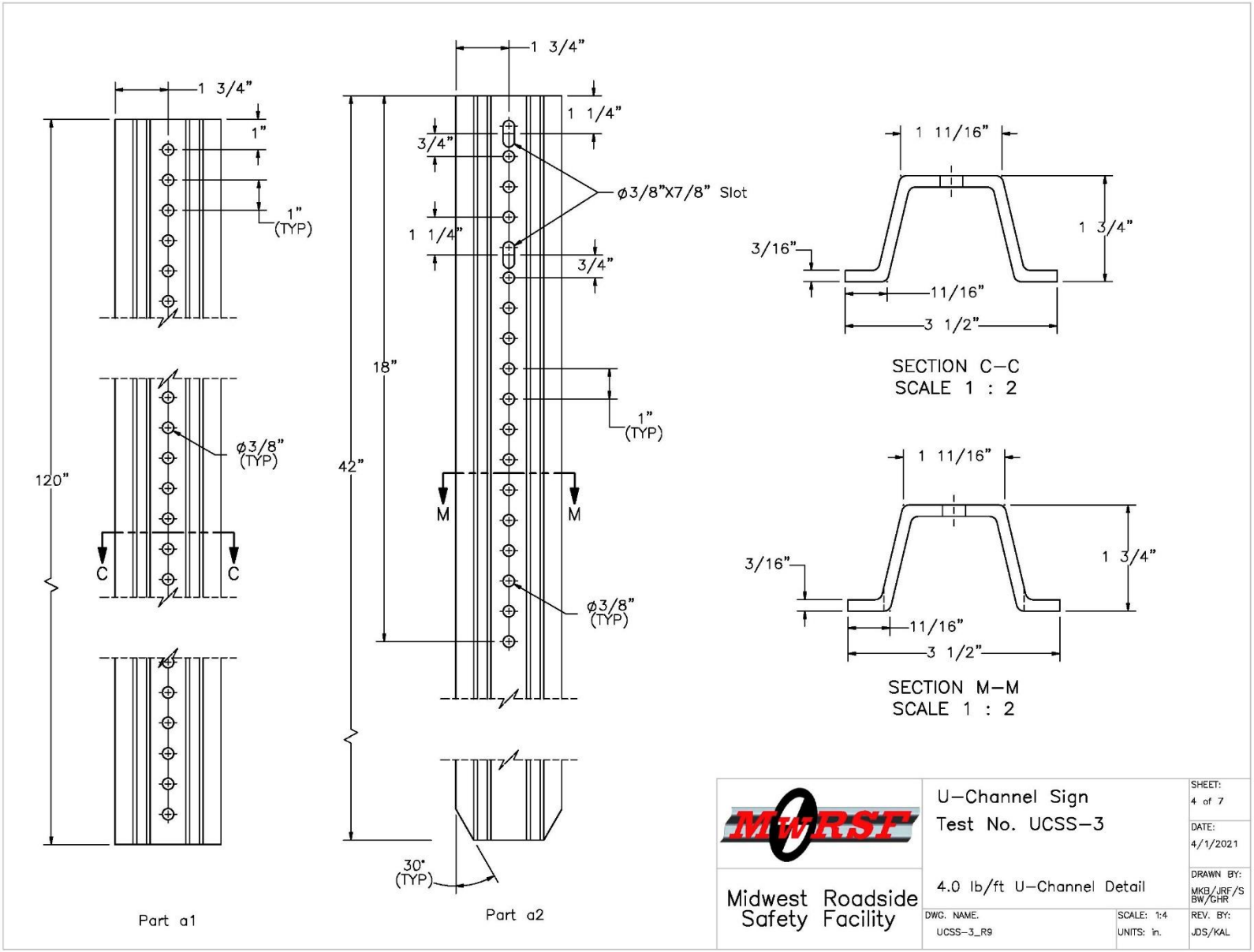

Figure 48. U-Channel Detail, Test No. UCSS-3

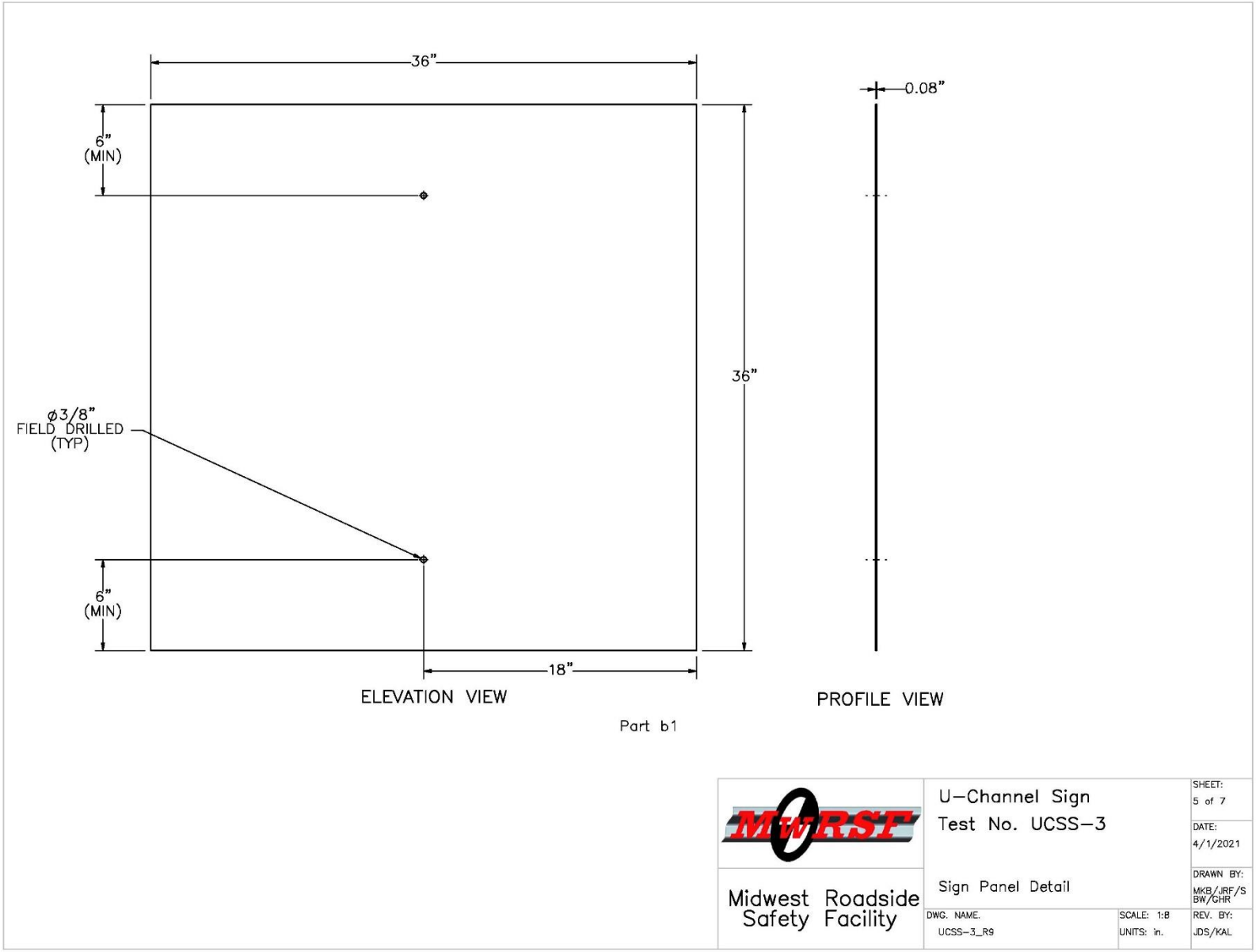

Figure 49. Sign Panel Detail, Test No. UCSS-3

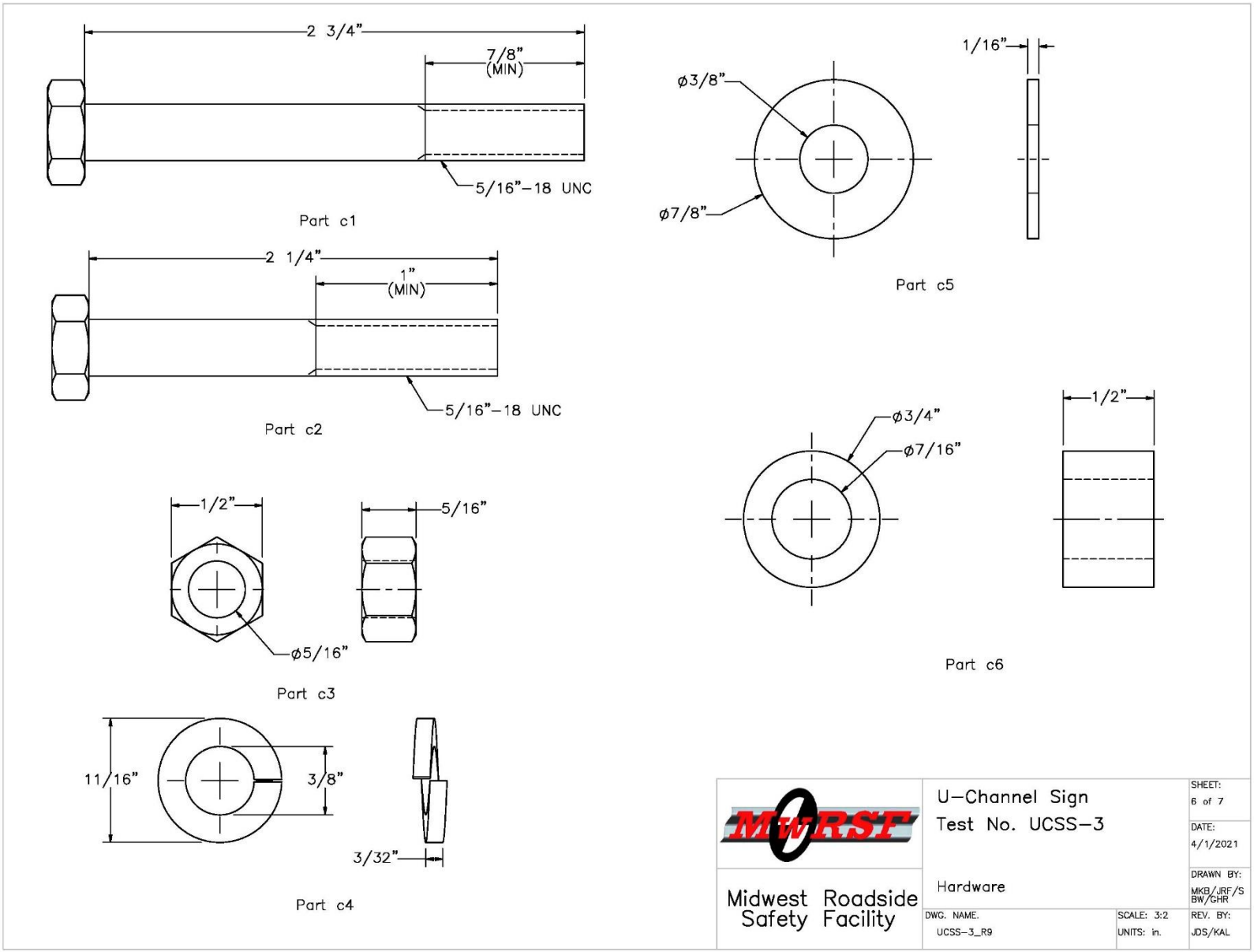

Figure 50. Hardware, Test No. UCSS-3

Item No.	QTY.	Description	Material Specification	Treatment Specification	Hardware Guide
a1	1	4.00 lb/ft U–Channel Sign Post, 120" Long	ASTM A499 Gr. 60 Min. Yield = 60 ksi	ASTM A123	PFP36
a2	1	4.00 lb/ft U–Channel Sign Post, 42" Long	ASTM A499 Gr. 60 Min. Yield = 60 ksi	ASTM A123	PFP36
b1	1	36"x36"x0.08" Sign with Reflective Sheeting	Aluminum Alloy 5052 or Similar	–	–
c1	2	5/16"–18 UNC, 2 3/4" Long Hex Bolt	SAE J429 Gr. 5 or 9	Fe/ZN 3AN per ASTM F1941	FBX08b
c2	2	5/16"–18 UNC, 2 1/4" Long Hex Bolt	SAE J429 Gr. 9	Zinc–Plated	–
c3	4	5/16"–18 UNC Heavy Hex Nut	SAE J995 Gr. 5 or 9	Fe/Zn 3AN per ASTM F1941	FNX08b
c4	4	3/8" Dia. Lock Washer	Low Carbon Steel	Fe/Zn 3AN per ASTM F1941	–
c5	8	5/16" Dia. Plain Round Washer	Low Carbon Steel	Fe/Zn 3AN per ASTM F1941	FWC08a
c6	2	ϕ3/4"x1/2" Post Spacer	As Supplied	–	–

* Part c2 may be 2 or 2 1/4 in. in length

Midwest Roadside Safety Facility

U–Channel Sign
Test No. UCSS–3

Bill of Materials

SHEET: 7 of 7
DATE: 4/1/2021
DRAWN BY: MKB/JRF/SBW/GHR
DWG. NAME. UCSS–3_R9
SCALE: None
UNITS: in.
REV. BY: JDS/KAL

Figure 51. Bill of Materials, Test No. UCSS-3

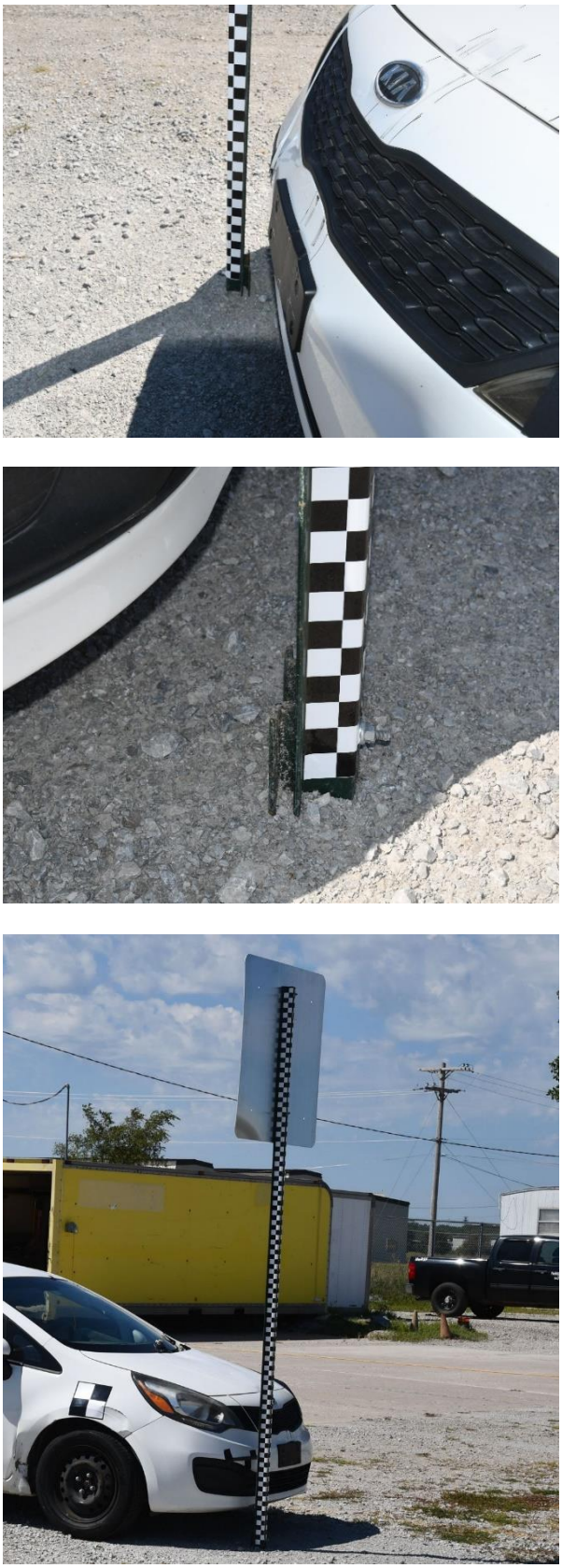

Figure 52. Sign Installation, Test No. UCSS-3

6.3.2 Weather Conditions

Test no. UCSS-3 was conducted on August 19, 2020 at approximately 12:00 p.m. The weather conditions as per the National Oceanic and Atmospheric Administration (station 14939/LNK) were reported and are shown in Table 8.

Table 8. Weather Conditions, Test No. UCSS-3

Temperature	81° F
Humidity	47%
Wind Speed	10 mph
Wind Direction	150° from True North
Sky Conditions	Sunny
Visibility	9.9 Statute Miles
Pavement Surface	Dry
Previous 3-Day Precipitation	0.38 in.
Previous 7-Day Precipitation	0.38 in.
Soil Moisture Content	Not Available

6.3.3 Test Description

The 2,432-lb surrogate, reusable, 1100C test vehicle impacted the single, U-channel sign support installation at a speed of 62.4 mph and at an angle of 0 degrees. Impact occurred at the right quarter point of the surrogate, reusable, 1100C test vehicle's front bumper, as shown in Figure 53. The surrogate vehicle came to rest downstream from the sign installation after brakes were applied. A detailed description of the sequential impact events is contained in Table 9. Sequential photographs are shown in Figure 54. Documentary photographs of the crash test are shown in Figure 55.

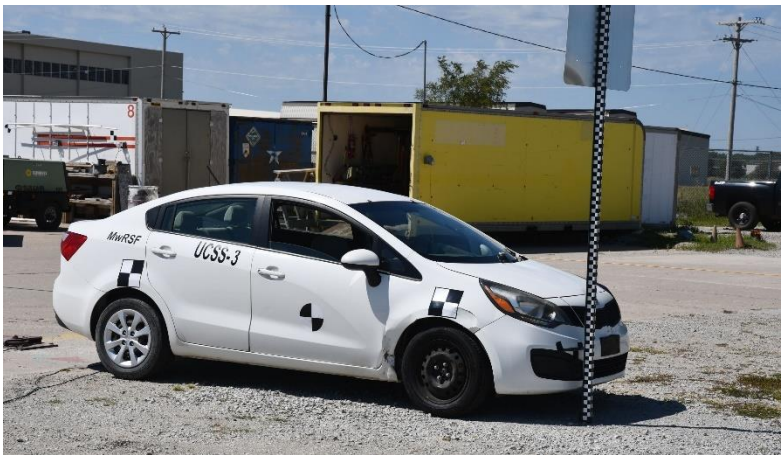

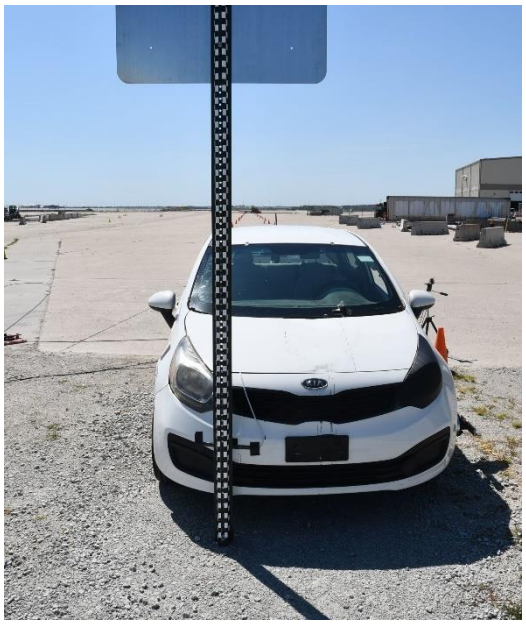

Figure 53. Impact Location, Test No. UCSS-3

Table 9. Sequential Description of Impact Events, Test No. UCSS-3

TIME (sec)	EVENT
0.000	Vehicle's front bumper contacted bottom of sign support at 62.4 mph and 0 degrees.
0.015	Sign support disengaged from stub and rotated toward vehicle.
0.063	Sign support lost contact with vehicle's front bumper.
0.110	Sign panel contacted vehicle's roof.
0.160	Vehicle cleared sign support stub traveling at 60.7 mph.
0.227	Sign panel lost contact with vehicle.

0.000 sec

0.050 sec

0.100 sec

0.150 sec

0.200 sec

0.250 sec

0.000 sec

0.050 sec

0.100 sec

0.150 sec

0.200 sec

0.250 sec

Figure 54. Additional Sequential Photographs, Test No. UCSS-3

Figure 55. Documentary Photographs, Test No. UCSS-3

6.3.4 Sign Panel and U-Channel Support Damage

System damage is shown in Figure 56. The system was impacted 23¾ in. above the ground at the surrogate, reusable, 1100C test vehicle's bumper height. The sign support deformed around the vehicle's front bumper and disengaged from the foundation stub due to the connection stub bolts fracturing. The U-channel sign support was deformed approximately 67 in. from the bottom of the sign panel. Minor deformation and scrapes were observed on the sign panel. The sign support stub was undamaged and extended approximately 4 in. above the ground line.

6.3.5 Surrogate, Reusable, 1100C Test Vehicle Damage

The surrogate, reusable, 1100C test vehicle sustained minor damage, as shown in Figure 57. Damage consisted of minor deformation and contact marks at the right quarter point of the front bumper where impact occurred. The right-front plastic wheel well disengaged after impact and rested on the right-front tire. Minor deformation was also observed on the right roof of the vehicle where the sign support contacted the roof. A small scrape was observed on the right edge of the vehicle roof panel. The windshield remained intact and the limits established in MASH 2016 for the various areas of the occupant compartment were not violated. No undercarriage contact with the sign support system was observed. Following test no. UCSS-3, no surrogate vehicle components required replacement, and the surrogate, reusable, 1100C test vehicle was able to be used in the subsequent test.

Figure 56. Sign Installation Damage, Test No. UCSS-3

Figure 57. Vehicle Damage, Test No. UCSS-3

6.3.6 Occupant Risk

The calculated OIVs and ORAs in both the longitudinal and lateral directions are shown in Table 10. It is important to note that in the test, the impulse on the vehicle was relatively small and of short duration. Thus, *x* and *y* in the flail-space model were less than 2 ft and 1 ft, respectively, during the period when the vehicle was in contact with the system. As specified in Section A5.5.2 of MASH 2016, in such cases, it was recommended that the OIV be set equal to the vehicle's change in velocity that occurred during contact with the test article, or parts thereof [1]. If parts of the test article remain with the vehicle after impact, the vehicle's change in velocity should be computed at the time the vehicle clears the footing or foundation of the test article. For test no. UCSS-3, the OIV, or in this case, the vehicle change in velocity, was reported when the vehicle lost contact with the test article. Note that the OIVs and ORAs were within suggested limits, as provided in MASH 2016. The calculated THIV, PHD, and ASI values are also shown in Table 10.

Table 10. Summary of OIV, ORA, THIV, PHD, and ASI Values, Test No. UCSS-3

Evaluation Criteria		Transducer		MASH 2016 Limits
		SLICE-1 (primary)	SLICE-2	
OIV ft/s	Longitudinal	-2.91	-2.93	±16
	Lateral	-0.68	-0.80	±16
ORA g's	Longitudinal	N/A	N/A	±20.49
	Lateral	N/A	N/A	±20.49
Maximum Angular Displacement deg.	Roll	-2.0	-1.7	±75
	Pitch	1.0	1.3	±75
	Yaw	0.4	0.4	not required
THIV ft/s		0.00	0.00	not required
PHD g's		6.10	7.04	not required
ASI		0.13	0.17	not required

Note: The vehicle cleared the test article foundation at 0.160 sec after impact for test no. UCSS-3, which was used to determine vehicle change in velocity, denoted as OIV.

N/A = Not Applicable

6.3.7 Discussion

The analysis of the test results for test no. UCSS-3 showed that the system readily activated in a predictable manner when impacted by the surrogate, reusable, 1100C test vehicle. A summary of the test results and sequential photographs are shown in Figure 58. Detached elements, fragments, or other debris from the test article did not penetrate or show potential for penetrating the occupant compartment, or present an undue hazard to other traffic, pedestrians, or work-zone personnel. Deformations of, or intrusions into, the occupant compartment that could have caused serious injury did not occur. Vehicle roll, pitch, and yaw angular displacements were deemed acceptable, because they did not adversely influence occupant risk nor cause rollover. Therefore, test no. UCSS-3 is anticipated to be acceptable according to the MASH 2016 safety performance criteria for test designation no. 3-61.

0.000 sec 0.050 sec 0.100 sec 0.150 sec 0.200 sec

- Test Agency ..... MwRSF
- Test Number UCSS-3
- Date 8/19/2020
- Representative MASH 2016 Test Designation No. 3-61
- Test Article ..... 7-ft tall, 4 lb/ft U-channel marker sign
- Key Component – Aluminum Sign Panel
  - Dimensions ..... 36 in. x 36 in. x 0.08 in.
  - Mounting Height (Bottom of Sign) ..... 7 ft
- Key Component – U-Channel Sign Support
  - Length (Upper Support) ..... 120 in.
  - Length (Lower Stub) ..... 42 in.
  - Embedment ..... 38 in.
- Soil Type ..... Coarse, crushed limestone (well-graded gravel)
- Vehicle Make /Model ..... Surrogate, Reusable, 1100C Test Vehicle
  - Curb ..... 2,480 lb
  - Test Inertial ..... 2,432 lb
  - Gross Static ..... 2,432 lb
- Impact Conditions
  - Speed ..... 62.4 mph
  - Angle ..... 0 deg.
  - Impact Location ..... Right Quarter Point of Front Bumper
- Kinetic Energy ..... 316.2 kip-ft > 288 kip-ft Limit from MASH 2016
- Exit Conditions
  - Speed ..... 60.7 mph
  - Angle ..... 0 deg.
- Vehicle Stability ..... Satisfactory
- Vehicle Stopping Distance ..... N/A
- Vehicle Damage ..... Minor
  - Parts in Need of Replacement ..... N/A
  - Maximum Interior Deformation ..... N/A

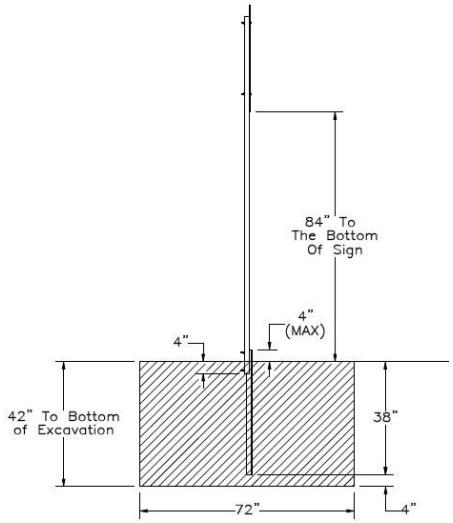

- Transducer Data

Evaluation Criteria		Transducer		MASH 2016 Limit
		SLICE-1 (primary)	SLICE-2	
OIV ft/s	Longitudinal	-2.91	-2.93	±16
	Lateral	-0.68	-0.80	±16
ORA g's	Longitudinal	N/A	N/A	N/A
	Lateral	N/A	N/A	N/A
Maximum Angular Displacement deg.	Roll	-2.0	-1.7	±75
	Pitch	1.0	1.3	±75
	Yaw	0.4	0.4	not required

Figure 58. Summary of Representative MASH Test Results and Sequential Photographs, Test No. UCSS-3

6.4 Surrogate, Reusable, 1100C Test Vehicle Test No. UCSS-4

6.4.1 Test Nos. UCSS-4 Design Details

The test installation for test no. UCSS-4 consisted of a single, U-channel sign support, as shown in Figures 59 through 65. The test article and test conditions were comparable to test no. UCSS-1, system no. 3 (i.e., test no. UCSS-1c) [6]. Photographs of the test installation are shown in Figure 66. Material specifications, mill certifications, and certificates of conformity for the system materials are shown in Appendix D.

The sign support was constructed with 4-lb/ft ASTM A499 Grade 60 U-channel, which supported a 36-in. x 36-in. x 0.08-in. aluminum sign panel with reflective sheeting. The sign panel was installed at a height of 5 ft measured from the bottom of the sign panel to the ground line. The sign support for test no. UCSS-4 comprised a 96-in. long upper sign support attached to a 42-in. long anchor stub with a lap splice connection. The upper sign support and anchor stub were connected at the lap splice with two $^{5}/_{16}$-in. diameter x 2¼-in. long Grade 9 hex bolts, with ¾-in. diameter x ½ in. wide steel spacers placed between the two U-channel sections. The anchor stub was installed with a 38-in. embedment depth into coarse, crushed limestone (well-graded gravel).

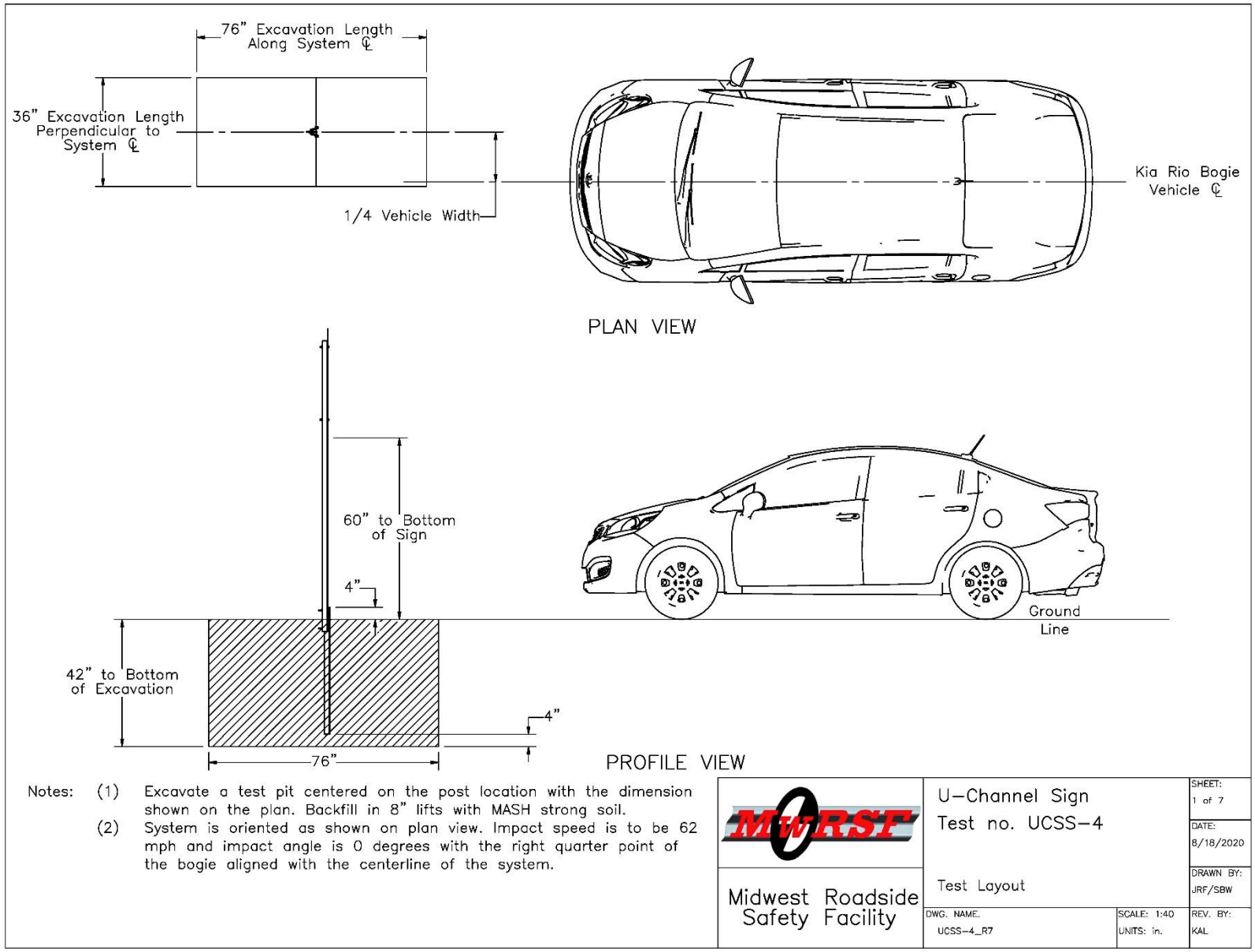

Figure 59. Test Installation Layout, Test No. UCSS-4

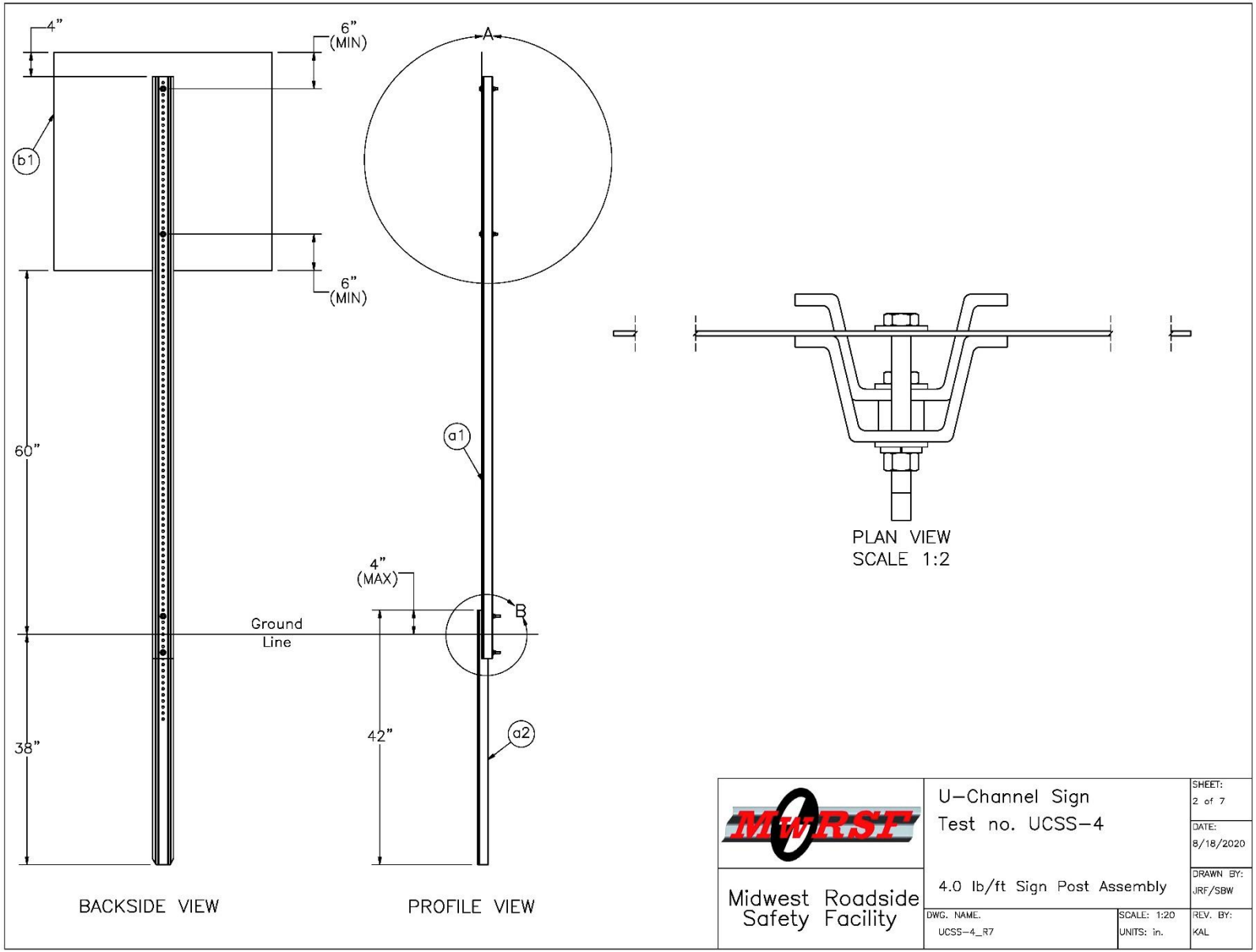

Figure 60. Sign Post Assembly, Test No. UCSS-4

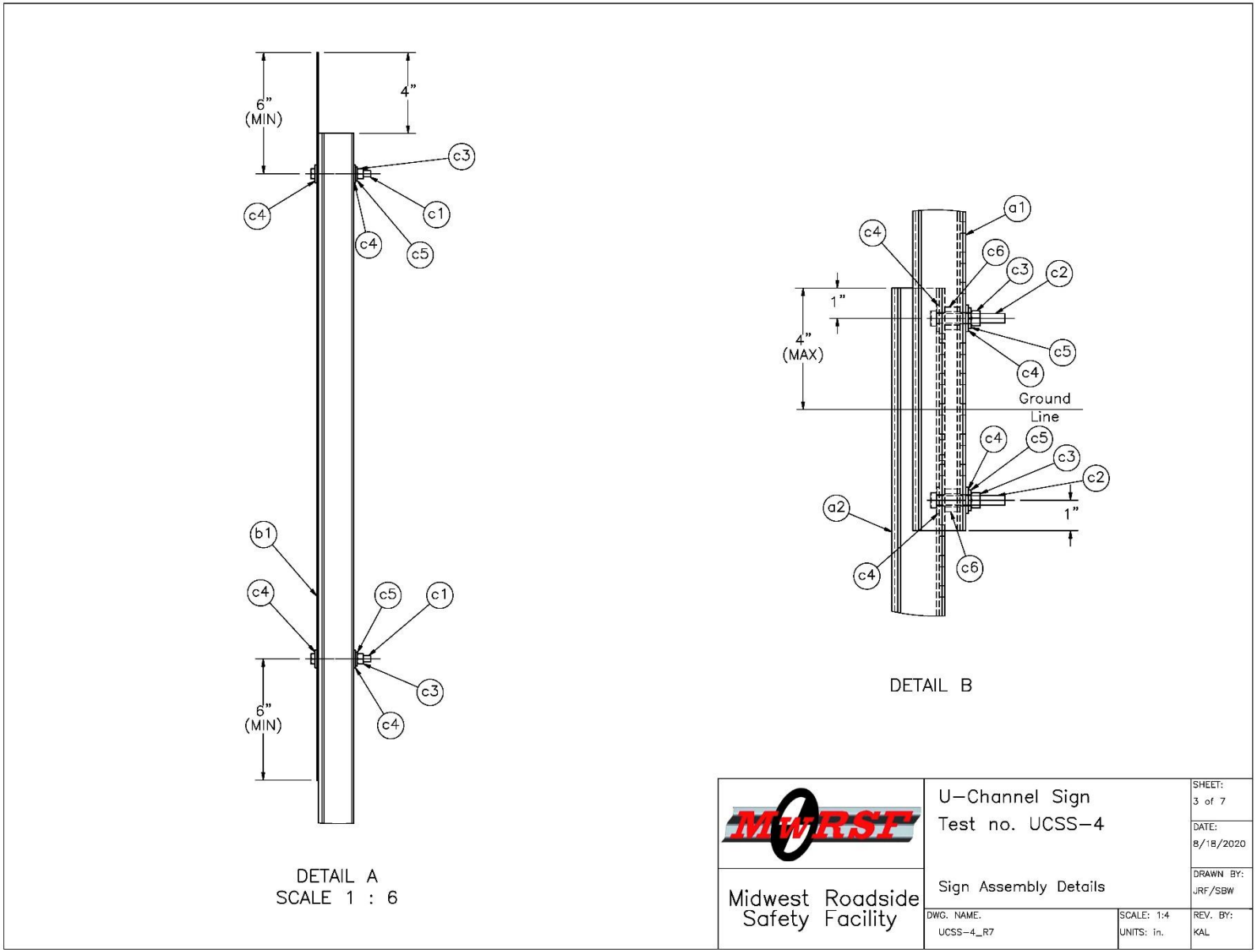

Figure 61. Sign Assembly Details, Test No. UCSS-4

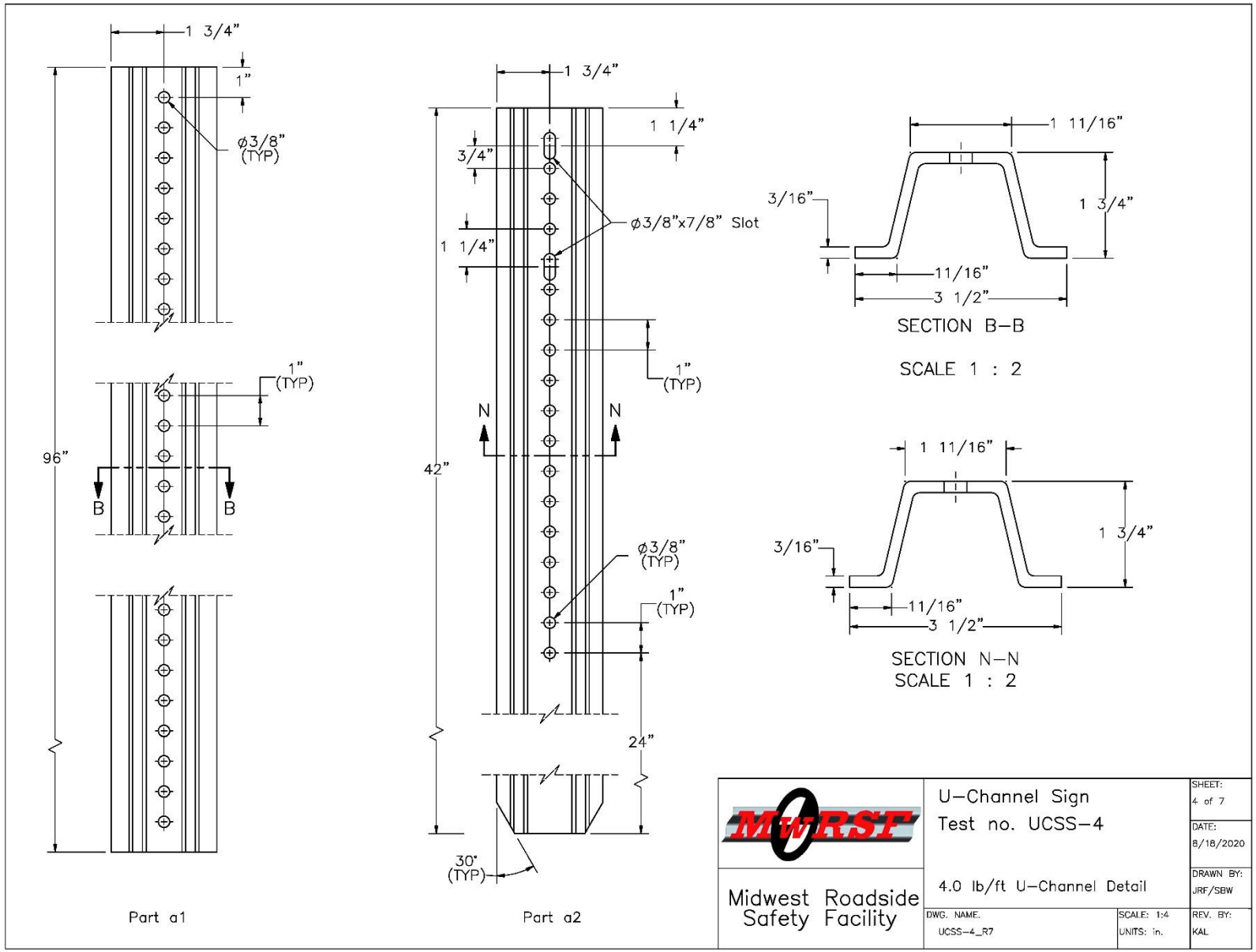

Figure 62. U-Channel Detail, Test No. UCSS-4

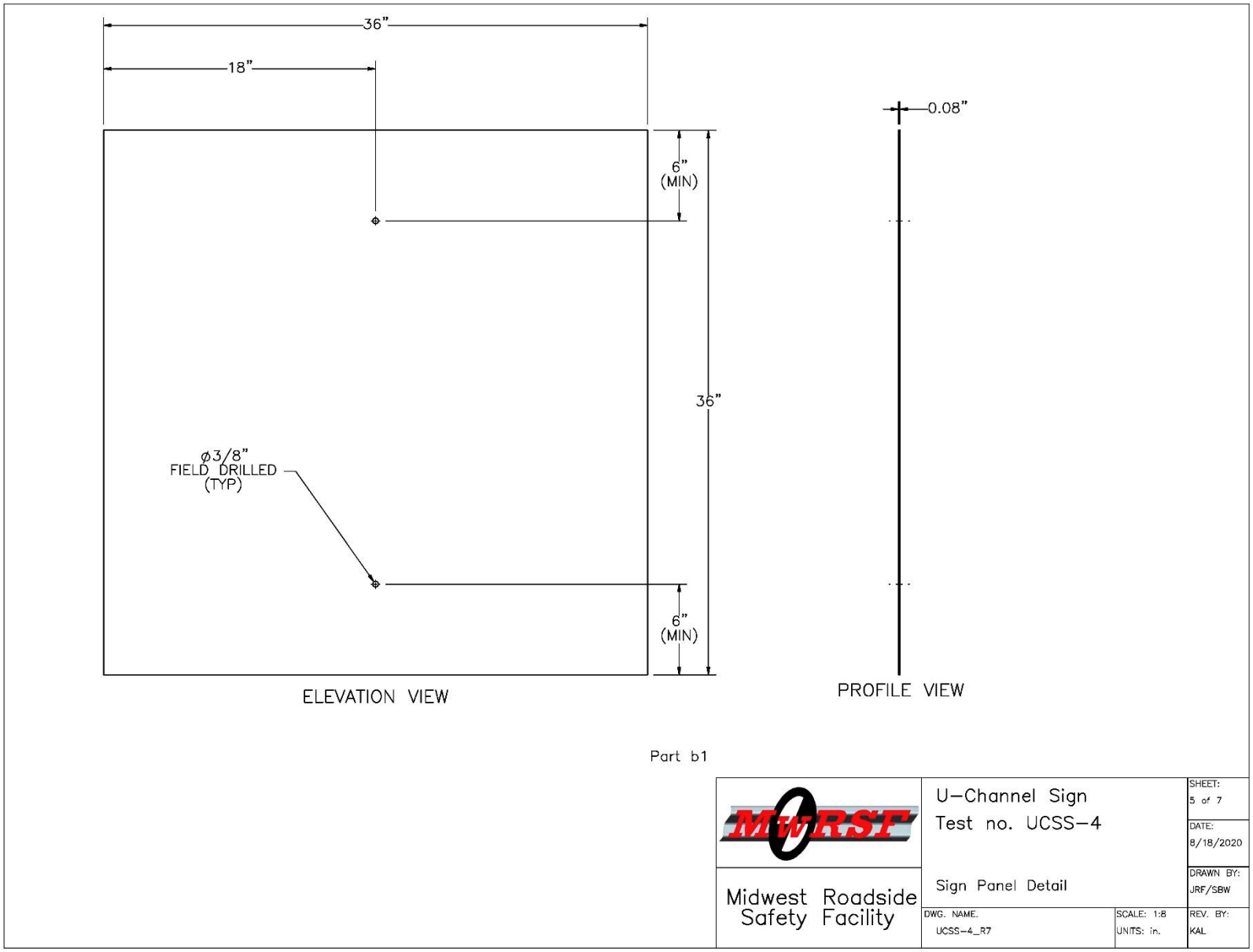

Figure 63. Sign Panel Detail, Test No. UCSS-4

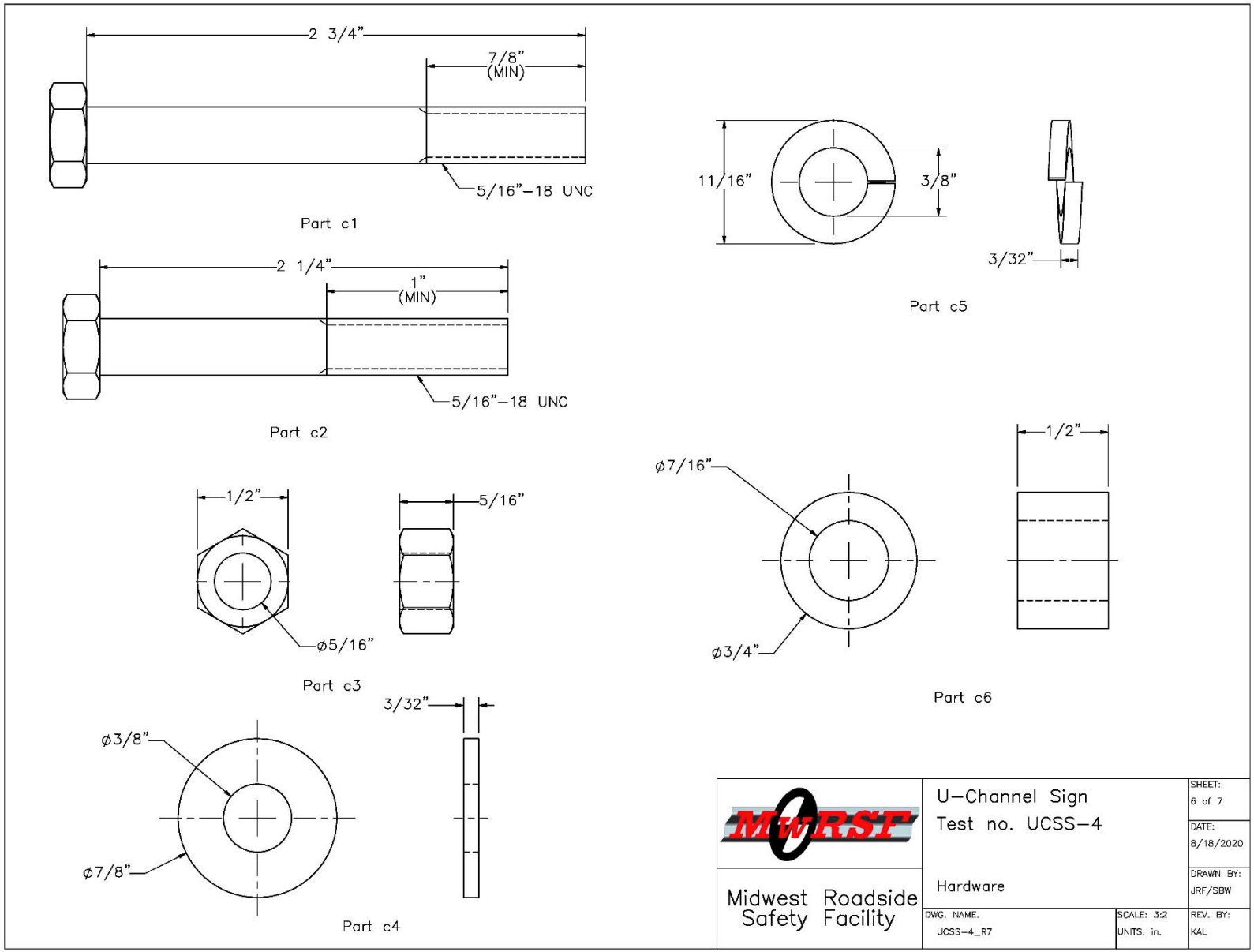

Figure 64. Hardware, Test No. UCSS-4

Item No.	QTY.	Description	Material Specification	Treatment Specification	Hardware Guide
a1	1	4.00 lb/ft U–Channel Sign Post, 96" Long	ASTM A499 Gr. 60 Min. Yield = 60 ksi	ASTM A123	–
a2	1	4.00 lb/ft U–Channel Sign Post, 42" Long	ASTM A499 Gr. 60 Min. Yield = 60 ksi	ASTM A123	–
b1	1	36"x36"x0.08" Sign with Reflective Sheeting	Aluminum Alloy 5052 or Similar	–	–
c1	2	5/16"–18 UNC, 2 3/4" Long Hex Bolt	SAE J429 Gr. 5 or 9	Fe/ZN 3AN per ASTM F1941	FBX08b
c2	2	5/16"–18 UNC, 2 1/4" Long Hex Bolt	SAE J429 Gr. 9	Zinc–Plated	–
c3	4	5/16"–18 UNC Heavy Hex Nut	SAE J995 Gr. 5 or 9	Fe/Zn 3AN per ASTM F1941	FNX08b
c4	8	5/16" Dia. Plain Round Washer	Low Carbon Steel	Fe/Zn 3AN per ASTM F1941	FWC08a
c5	4	3/8" Dia. Lock Washer	Low Carbon Steel	Fe/Zn 3AN per ASTM F1941	–
c6	2	ø3/4"x1/2" Post Spacer	As Supplied	Zinc–Plated	–

* Part c2 may be 2 or 2 1/4 in. in length

MwRSF Midwest Roadside Safety Facility	U–Channel Sign Test no. UCSS–4		SHEET: 7 of 7
			DATE: 8/18/2020
	Bill of Materials		DRAWN BY: JRF/SBW
	DWG. NAME. UCSS–4_R7	SCALE: 1:192 UNITS: in.	REV. BY: KAL

Figure 65. Bill of Materials, Test No. UCSS-4

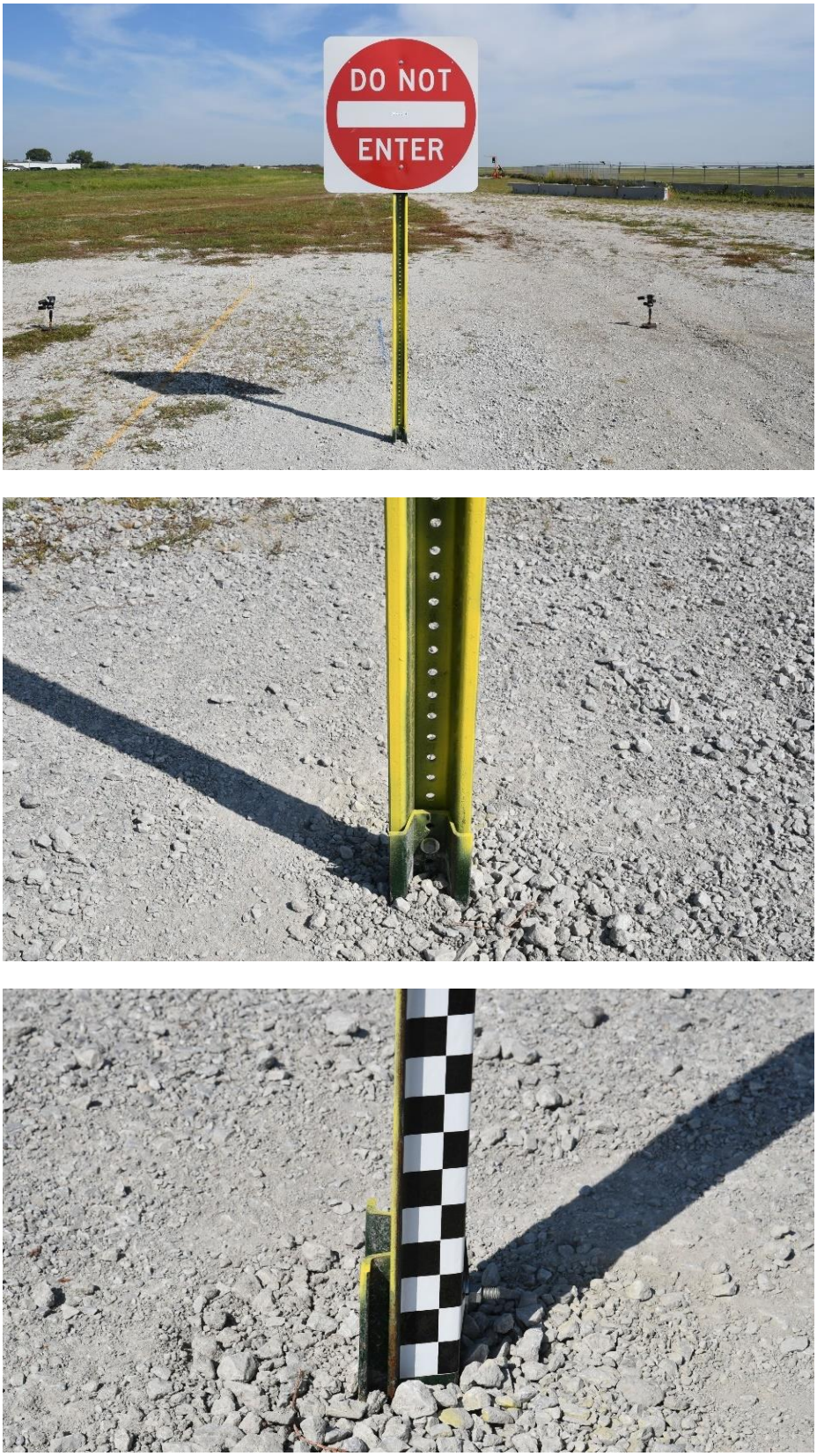

Figure 66. Sign Installation, Test No. UCSS-4

6.4.2 Weather Conditions

Test no. UCSS-4 was conducted on August 20, 2020 at approximately 12:00 p.m. The weather conditions as per the National Oceanic and Atmospheric Administration (station 14939/LNK) were reported and are shown in Table 11.

Table 11. Weather Conditions, Test No. UCSS-4

Temperature	82° F
Humidity	51%
Wind Speed	13 mph
Wind Direction	190° from True North
Sky Conditions	Sunny
Visibility	8.7 Statute Miles
Pavement Surface	Dry
Previous 3-Day Precipitation	0.00 in.
Previous 7-Day Precipitation	0.38 in.
Soil Moisture Content	2.28%

6.4.3 Test Description

The 2,432-lb surrogate, reusable, 1100C test vehicle impacted the single, U-channel sign support installation at a speed of 62.4 mph and at an angle of 0 degrees. Impact occurred at the right quarter point of the surrogate vehicle's front bumper, as shown in Figure 67. The surrogate vehicle came to rest downstream from the installation after brakes were applied. A detailed description of the sequential impact events is contained in Table 12. Sequential photographs are shown in Figure 68. Documentary photographs of the crash test are shown in Figures 69 and 70.

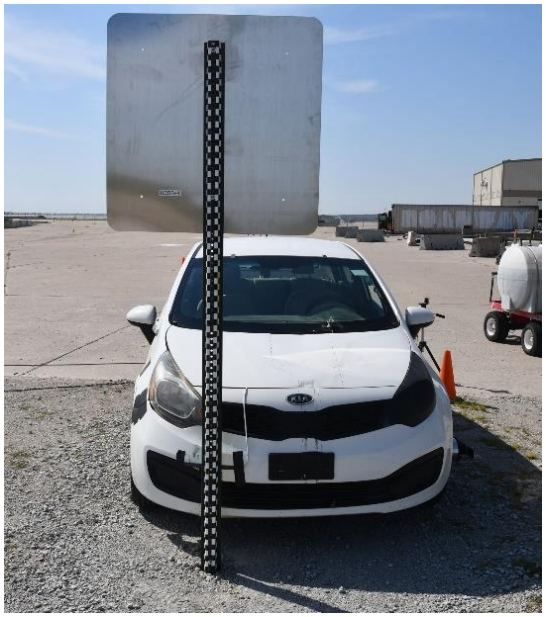

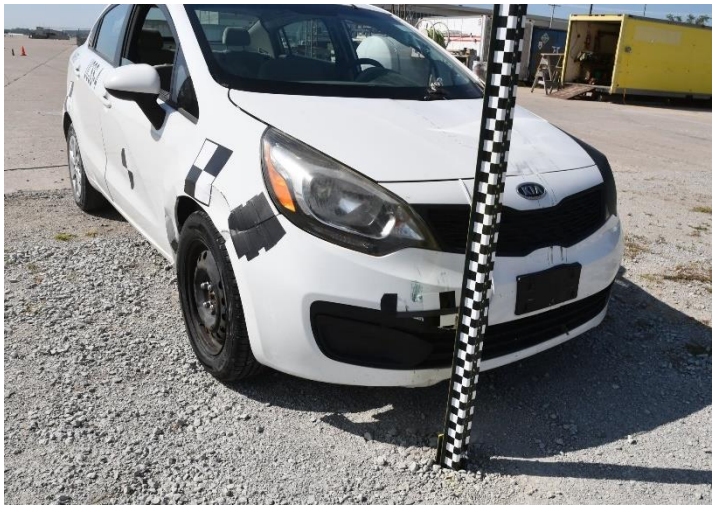

Figure 67. Impact Location, Test No. UCSS-4

Table 12. Sequential Description of Impact Events, Test No. UCSS-4

TIME (sec)	EVENT
0.000	Vehicle's front bumper contacted bottom of sign support at 62.4 mph and 0 degrees.
0.021	Sign support fractured at bumper height and disengaged from anchor stub.
0.024	Sign support lost contact with vehicle's front bumper.
0.067	Sign panel contacted vehicle's roof and upper windshield.
0.153	Sign panel lost contact with vehicle.
0.160	Vehicle cleared sign support stub traveling at 61.0 mph.

0.000 sec

0.050 sec

0.100 sec

0.150 sec

0.200 sec

0.250 sec

0.000 sec

0.050 sec

0.100 sec

0.150 sec

0.200 sec

0.250 sec

Figure 68. Additional Sequential Photographs, Test No. UCSS-4

Figure 69. Documentary Photographs, Test No. UCSS-4

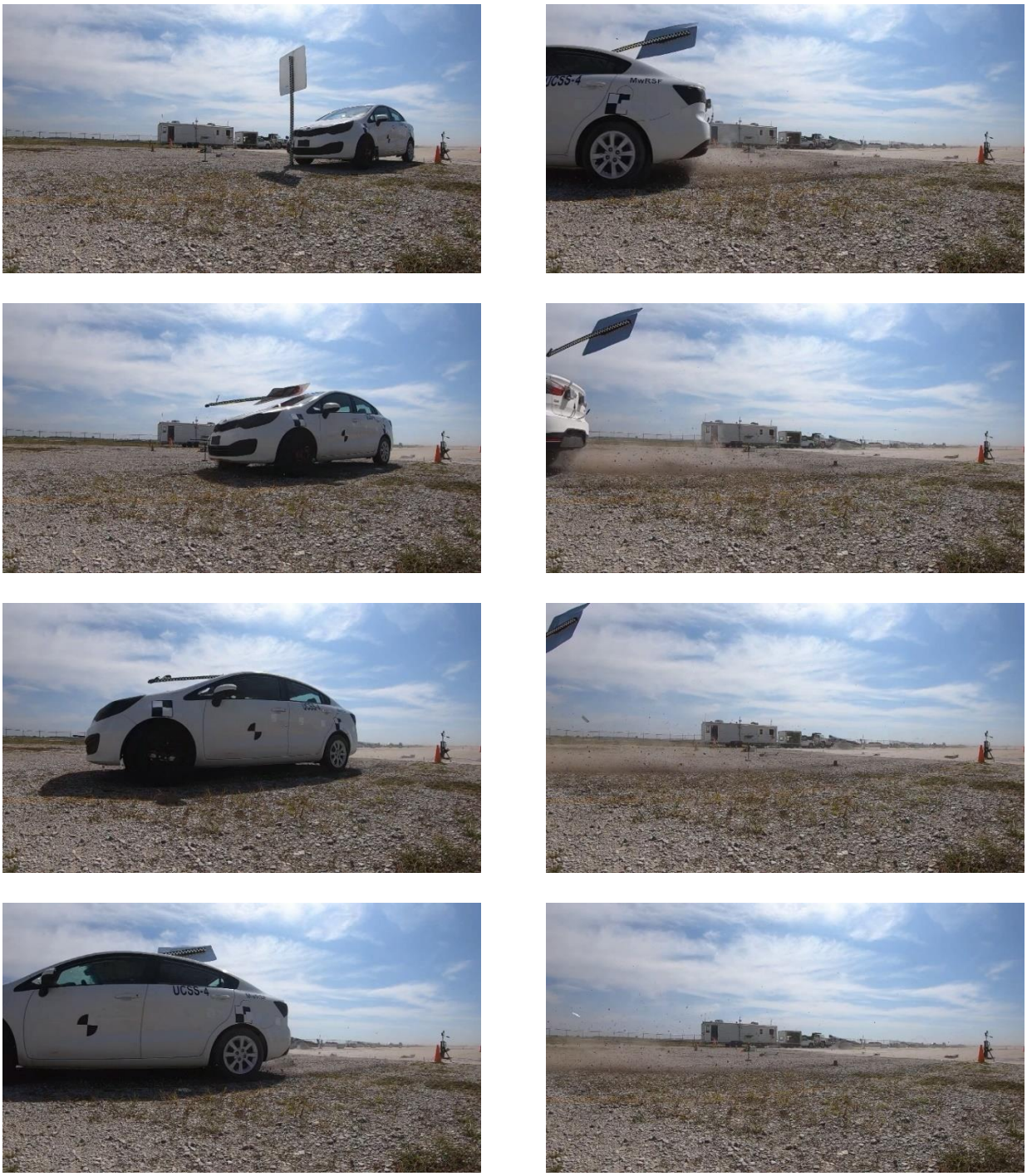

Figure 70. Additional Documentary Photographs, Test No. UCSS-4

6.4.4 Sign Panel and U-Channel Support Damage

System damage is shown in Figure 71. The system was impacted 23¾ in. above ground at the bumper height of the surrogate, reusable, 1100C test vehicle. Both the upper and lower stub bolts fractured and the sign support disengaged from the support stub. The U-channel sign support fractured approximately 44 in. from the bottom of the sign panel. The sign panel was deformed and scrapes were observed on the front face of the sign panel. The sign support stub was undamaged and extended approximately 4 in. above the ground line.

6.4.5 Surrogate, Reusable, 1100C Test Vehicle Damage

The surrogate, reusable, 1100C test vehicle sustained minor damage, as shown in Figures 72 and 73. Damage consisted of minor deformation and contact marks at the right quarter point of the front bumper where impact occurred. The front of the roof was deformed across the approximate width of the vehicle, and the upper-right corner of the windshield was shattered where the sign panel impact occurred. The maximum roof deformation was 1.8 in., as measured by LIDAR scanning and shown in Figure 74. Excessive occupant compartment deformation did not occur, and the limits established in MASH 2016 for the various areas of the occupant compartment were not violated. Following test no. UCSS-4, the front bumper, hood, and windshield on the surrogate, reusable, 1100C test vehicle were replaced, and the roof was repaired for the subsequent test.

During the test, the sign support fractured in two locations. The lower fractured portion of the sign support rotated down and contacted the ground and the surrogate, reusable, 1100C test vehicle undercarriage. Although no spearing, protrusion, or excessive floorpan deformation occurred, a potential existed for the test article to contact or penetrate the occupant compartment floorpan due to the test article fracture. This event is shown in Figure 75.

Figure 71. Sign Installation Damage, Test No. UCSS-4

Figure 72. Vehicle Damage, Test No. UCSS-4

Figure 73. Vehicle Roof Damage, Test No. UCSS-4

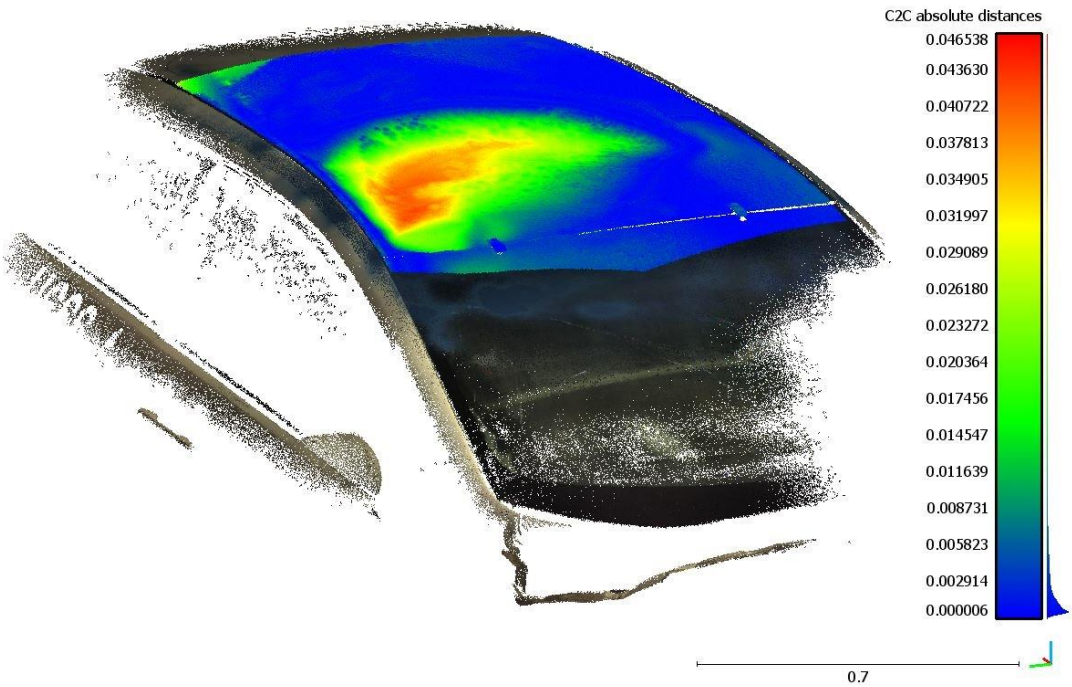

Figure 74. Vehicle Roof Deformation, Test No. UCSS-4 (units = m), Maximum Deformation = 1.8 in.

Figure 75. Fractured and Overriden Portion of Post during Test No. UCSS-4

6.4.6 Occupant Risk

The calculated OIVs and ORAs in both the longitudinal and lateral directions are shown in Table 13. It is important to note that in the test, the impulse on the vehicle was relatively small and of short duration. Thus, *x* and *y* in the flail-space model were less than 2 ft and 1 ft, respectively, during the period when the vehicle was in contact with the system. As specified in Section A5.5.2

of MASH 2016, in such cases, it was recommended that the OIV be set equal to the vehicle's change in velocity that occurred during contact with the test article, or parts thereof [1]. If parts of the test article remain with the vehicle after impact, the vehicle's change in velocity should be computed at the time the vehicle clears the footing or foundation of the test article. For test no. UCSS-4, the OIV, or in this case, the vehicle change in velocity, was reported when the vehicle lost contact with the test article. Note that the OIVs and ORAs were within suggested limits, as provided in MASH 2016. The calculated THIV, PHD, and ASI values are also shown in Table 13.

Table 13. Summary of OIV, ORA, THIV, PHD, and ASI Values, Test No. UCSS-4

Evaluation Criteria		**Transducer**		**MASH 2016 Limits**
		SLICE-1 (primary)	**SLICE-2**	
OIV ft/s	Longitudinal	-2.02	-1.99	±16
	Lateral	-0.66	-0.51	±16
ORA g's	Longitudinal	N/A	N/A	±20.49
	Lateral	N/A	N/A	±20.49
Maximum Angular Displacement deg.	Roll	-0.9	-0.9	±75
	Pitch	0.7	1.1	±75
	Yaw	-0.2	0.3	not required
THIV ft/s		0.00	0.00	not required
PHD g's		4.04	4.00	not required
ASI		0.10	0.13	not required

Note: The vehicle cleared the test article foundation at 0.160 sec after impact for test no. UCSS-4, which was used to determine vehicle change in velocity, denoted as OIV.

N/A = Not Applicable

6.4.7 Discussion

The analysis of the test results for test no. UCSS-4 showed that the system readily activated in a predictable manner when impacted by the surrogate, reusable, 1100C test vehicle. A summary of the test results and sequential photographs are shown in Figure 76. Detached elements, fragments, or other debris from the test article did not penetrate or show potential for penetrating the occupant compartment, or present an undue hazard to other traffic, pedestrians, or work-zone personnel. Deformations of, or intrusions into, the occupant compartment that could have caused serious injury did not occur. Vehicle roll, pitch, and yaw angular displacements were deemed acceptable, because they did not adversely influence occupant risk nor cause rollover. Therefore, test no. UCSS-4 is anticipated to be acceptable according to the MASH 2016 safety performance criteria for test designation no. 3-61.

0.000 sec | 0.050 sec | 0.100 sec | 0.150 sec | 0.200 sec

- Test Agency ..... MwRSF
- Test Number UCSS-4
- Date 8/20/2020
- Representative MASH 2016 Test Designation No. 3-61
- Test Article ..... 5-ft tall, 4 lb/ft U-channel marker sign
- Key Component – Aluminum Sign Panel
  - Dimensions ..... 36 in. x 36 in. x 0.08 in.
  - Mounting Height (Bottom of Sign) ..... 5 ft
- Key Component – U-Channel Sign Support
  - Length (Upper Support) ..... 96 in.
  - Length (Lower Stub) ..... 42 in.
  - Embedment ..... 38 in.
- Soil Type ..... Coarse, crushed limestone (well-graded gravel)
- Vehicle Make /Model ..... Surrogate, Reusable, 1100C Test Vehicle
  - Curb ..... 2,480 lb
  - Test Inertial ..... 2,432 lb
  - Gross Static ..... 2,432 lb
- Impact Conditions
  - Speed ..... 62.4 mph
  - Angle ..... 0 deg.
  - Impact Location ..... Right Quarter Point of Front Bumper
- Kinetic Energy ..... 316.2 kip-ft > 288 kip-ft Limit from MASH 2016
- Exit Conditions
  - Speed ..... 61.0 mph
  - Angle ..... 0 deg.
- Vehicle Stability ..... Satisfactory
- Vehicle Stopping Distance ..... N/A
- Vehicle Damage ..... Minor
  - Parts in Need of Replacement ..... Front Bumper, Windshield, Roof (Repaired)
  - Maximum Interior Deformation ..... 1.8 in.

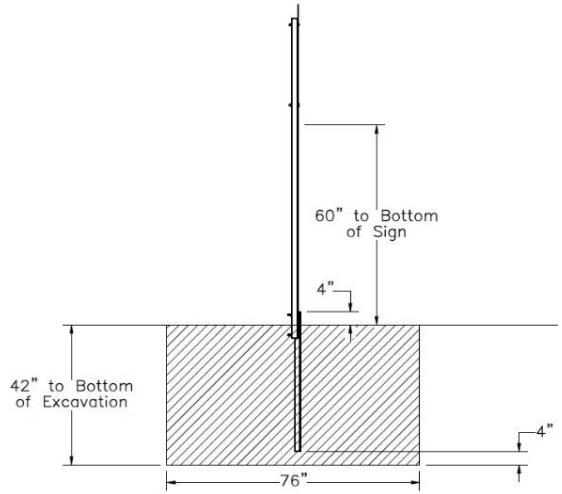

- Transducer Data

Evaluation Criteria		Transducer		MASH 2016 Limit
		SLICE-1 (primary)	SLICE-2	
OIV ft/s	Longitudinal	-2.02	-1.99	±16
	Lateral	-0.66	-0.51	±16
ORA g's	Longitudinal	N/A	N/A	N/A
	Lateral	N/A	N/A	N/A
Maximum Angular Displacement deg.	Roll	-0.9	-0.9	±75
	Pitch	0.7	1.1	±75
	Yaw	-0.2	0.3	not required

Figure 76. Summary of Representative MASH Test Results and Sequential Photographs, Test No. UCSS-4

6.5 Analysis of the Performance of Surrogate, Reusable, 1100C Test Vehicle

Following the conclusion of test nos. UCSS-2 through UCSS-4, an analysis was performed to determine whether the surrogate, reusable, 1100C test vehicle compared favorably with the vehicle and sign support response observed during test no. UCSS-1, systems 1 through 3 (i.e., test nos. UCSS-1a, UCSS-1b, and UCSS-1c). Comparative images of the sequential test images and system damage are shown in Figures 77 through 82.

Differences were observed between full-scale crash test and surrogate, reusable, 1100C test vehicle impact results. For example, during test no. UCSS-1a, the 1.12 lb/ft U-channel sign support was pulled through the soil and wrapped around the bumper of the surrogate, reusable, 1100C test vehicle. During test no. UCSS-2, the post deformed around the surrogate, reusable, 1100C test vehicle, but the post did not pull through the soil, and instead fractured near the sign panel. Likewise, the fracture locations were similar for test nos. UCSS-1c and UCSS-4, but the lower fractured portion of the post remained attached to the foundation post in test no. UCSS-1c, but released from the foundation post during test no. UCSS-4.

Most of the differences in fracture behavior and sign trajectory were attributed to the geometrical differences in bumper heights and bumper cover and cartridge stiffnesses between the Toyota Yaris (test no. UCSS-1) and Kia Rio (test nos. UCSS-2 through UCSS-4) as well as the minor variations in material properties of the evaluated sign supports. When sign supports bent or fractured, the bend and fracture locations for the first and second tested configurations were similar. Moreover, the locations of the sign panel and post contact with the vehicle's roof as well as the angular velocity of the sign support after fracture (when applicable) were very similar between the full-scale and surrogate, reusable, 1100C test vehicle tests, as shown in Table 14. Note that because test no. UCSS-1b results were determined to be indeterminate due to the effect of system no. 1 (UCSS-1a), results of test nos. UCSS-1b and UCSS-3 are not provided.

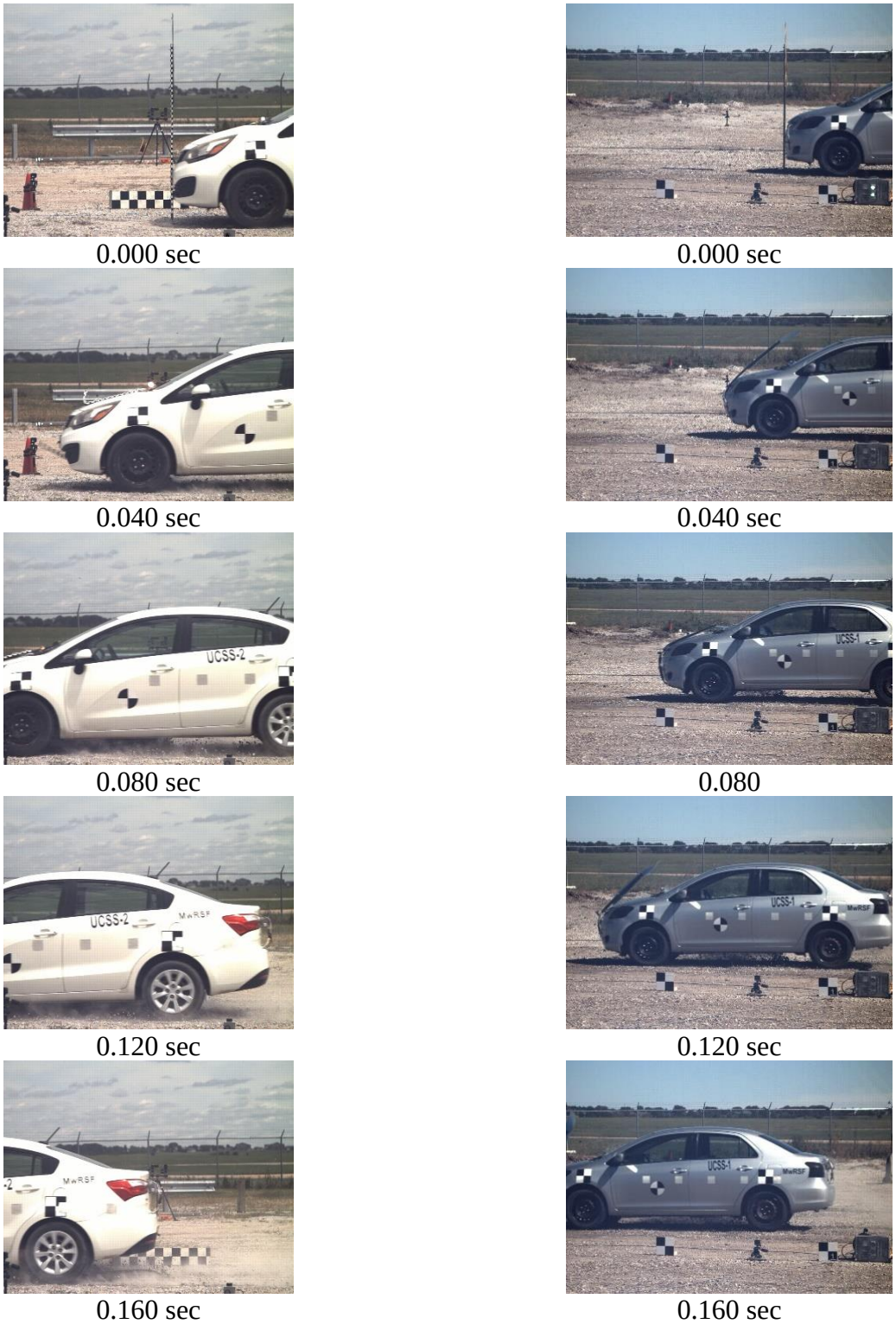

Figure 77. Sequential Image Comparison of Test Nos. UCSS-2 (left) and UCSS-1a (right)

(a) UCSS-2 System Damage

(b) UCSS-1a Damage

Figure 78. System Damage Comparison (a) UCSS-2 (b) UCSS-1a

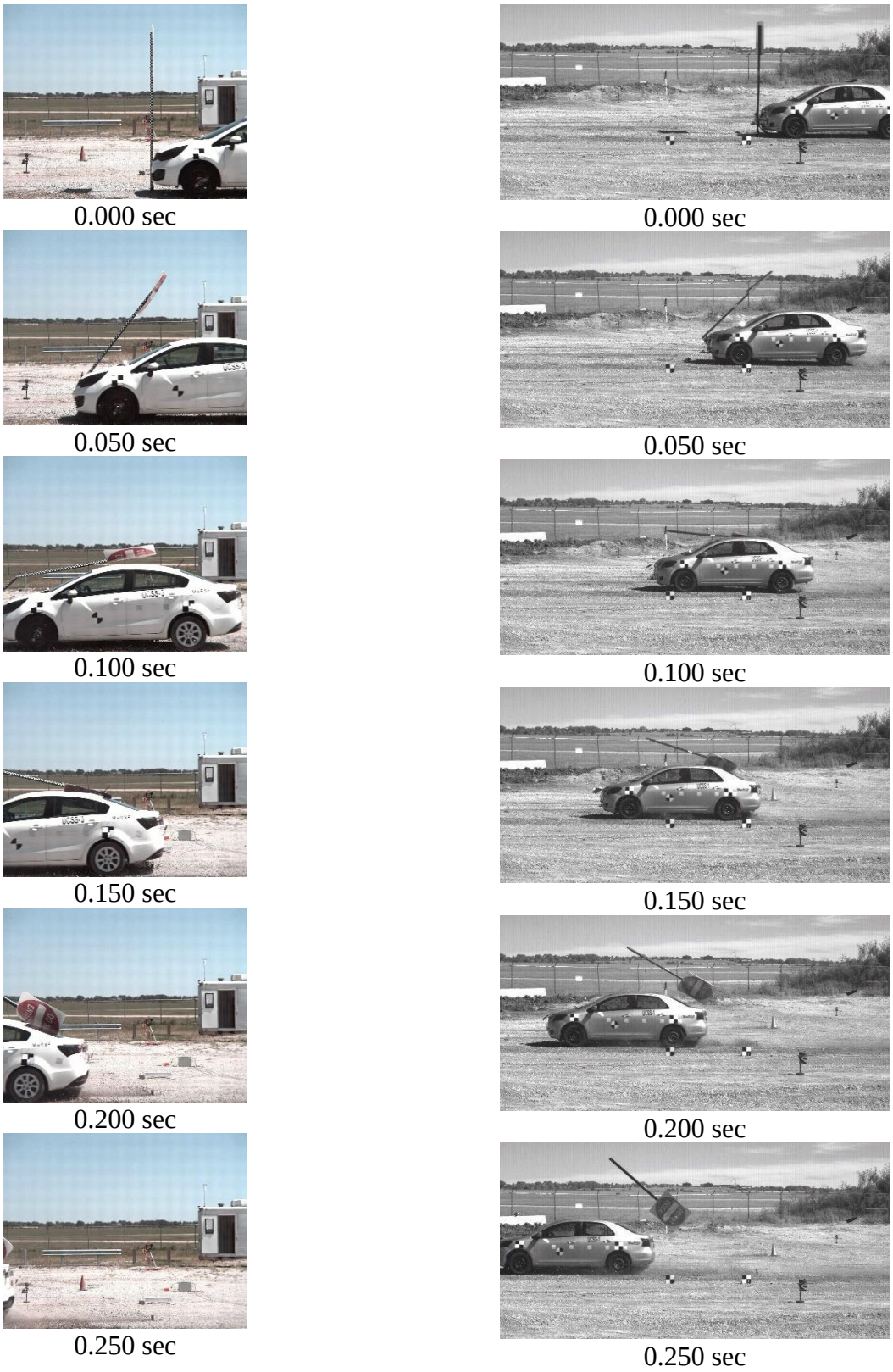

Figure 79. Sequential Image Comparison of Test Nos. UCSS-3 (left) and UCSS-1b (right)

(a) UCSS-3 System Damage

(b) UCSS-1b Damage

Figure 80. System Damage Comparison (a) UCSS-3 (b) UCSS-1b

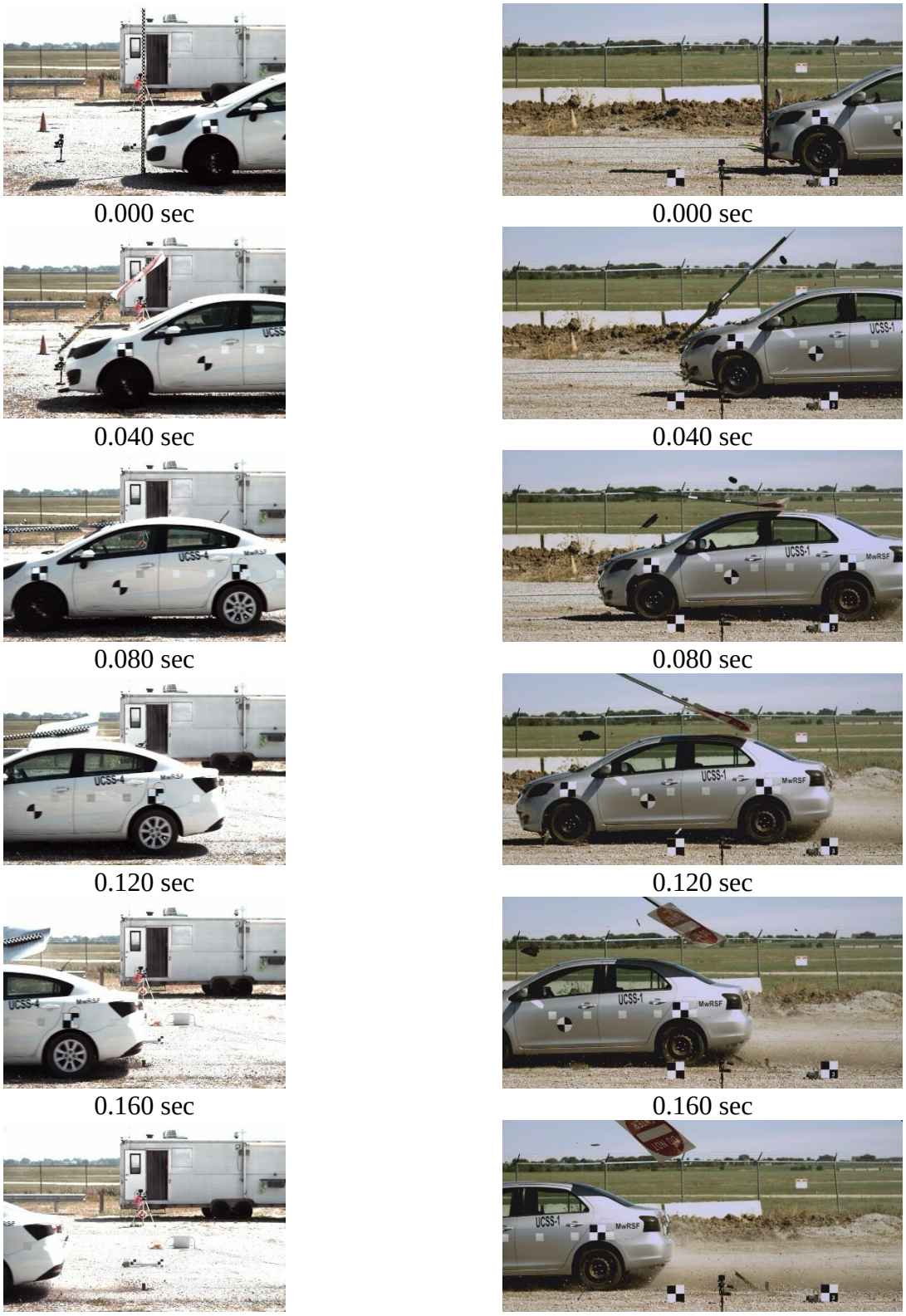

Figure 81. Sequential Image Comparison of Test Nos. UCSS-4 (left) and UCSS-1c (right)

(a) UCSS-4 System Damage

(b) UCSS-1c Damage

Figure 82. System Damage Comparison (a) UCSS-4 (b) UCSS-1c

Table 14. Comparison of Fractured Sign Rotation: UCSS-4 and UCSS-1c

Test No.	Fracture Location	Angular Velocity	Longitudinal Point of Impact on Roof
UCSS-4	16.6 in. from ground	20.1 rad/s	12.2 in. from top of windshield
UCSS-1c	16.9 in. from ground	20.7 rad/s	34.2 in. from top of windshield

The surrogate, reusable, 1100C test vehicle used all OEM parts in pristine structural condition for test nos. UCSS-2 through UCSS-4. The minor inertial and floorpan stiffness differences caused by bolting the protective plate to the undercarriage did not affect test results, as the bumper height was not changed and none of the sign supports contacted any portion of the undercarriage. Despite the differences in the fracture behavior of the sign supports, the vehicle behavior, post-fracture sign dynamics, roof contact location and damage extent, and resulting system damage were very similar for the full-scale crash test and surrogate, reusable, 1100C test vehicle tests. Therefore, the surrogate, reusable, 1100C test vehicle was determined to be a valid representation of the small car during sign support impacts. At this time, MwRSF has limited the use of this surrogate vehicle to test conditions in which the structural frame of the vehicle including the bumper load plate/back stop are not damaged until it can be determined if repairs to structural elements compromises the vehicle's ability to be repaired and to replicate MASH 1100C small car results.

7 SURROGATE, REUSABLE, 1100C TEST VEHICLE TEST NO. UCSS-7

The test installation for test nos. UCSS-7 was identical to the test installation in test no. UCSS-4. The purpose of conducting test no. UCSS-7 was to evaluate the sign support system with impact conditions consistent with MASH test designation no. 3-60. As noted, in order for sign support systems to receive MASH eligibility according to FHWA guidelines, each test in the MASH evaluation suite must be conducted. Results of test no. UCSS-7 (MASH test designation no. 3-60) and nos. UCSS-1c and UCSS-4 (MASH test designation no. 3-61) provide two of the three required evaluations for determining MASH eligibility.

Design details for test no. UCSS-7 are shown in Figures 83 through 89. Photographs of the test installation are shown in Figure 90. Material specifications, mill certifications, and certificates of conformity for the system materials are shown in Appendix E.

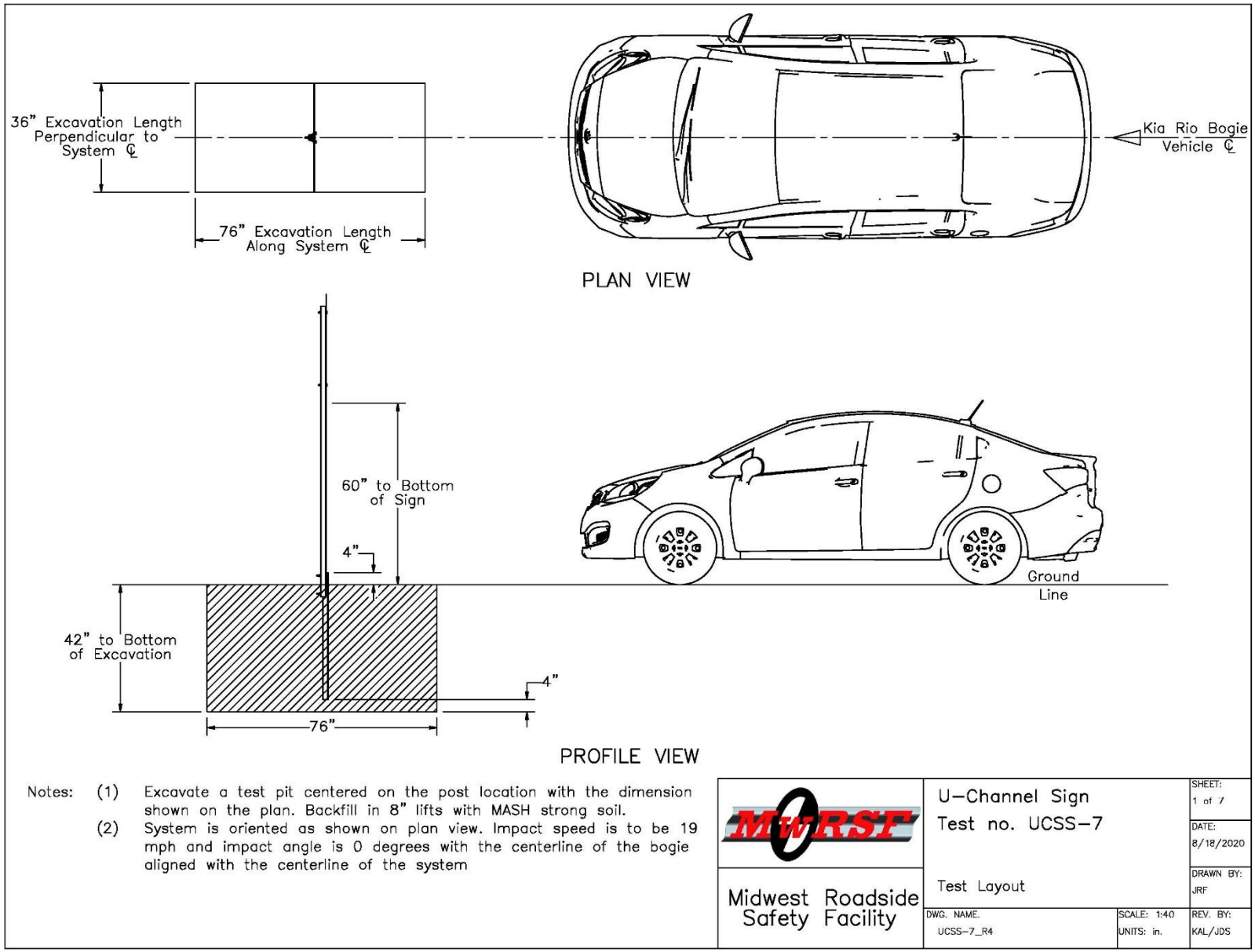

Figure 83. Test Installation Layout, Test No. UCSS-7

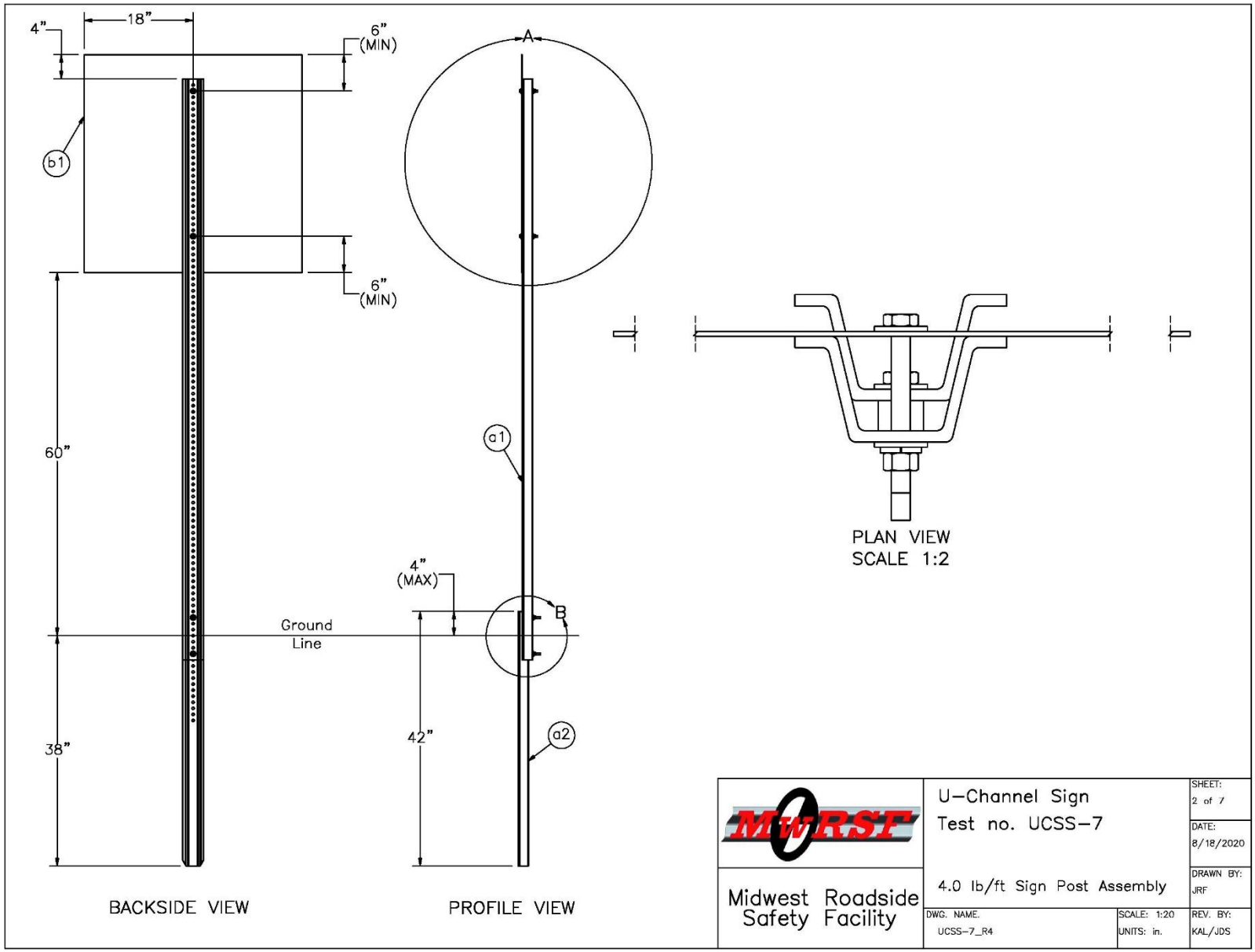

Figure 84. Sign Post Assembly, Test No. UCSS-7

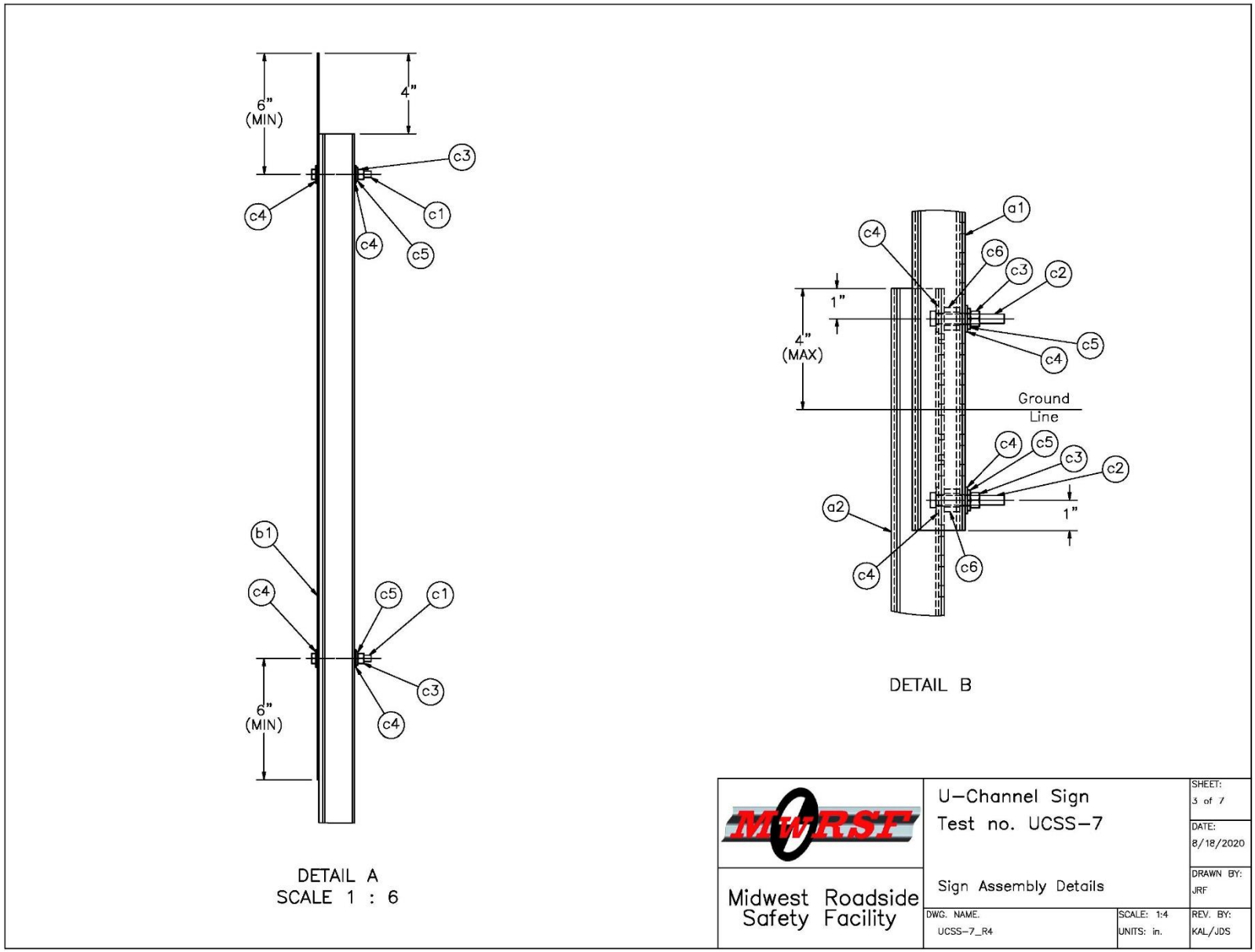

Figure 85. Sign Assembly Details, Test No. UCSS-7

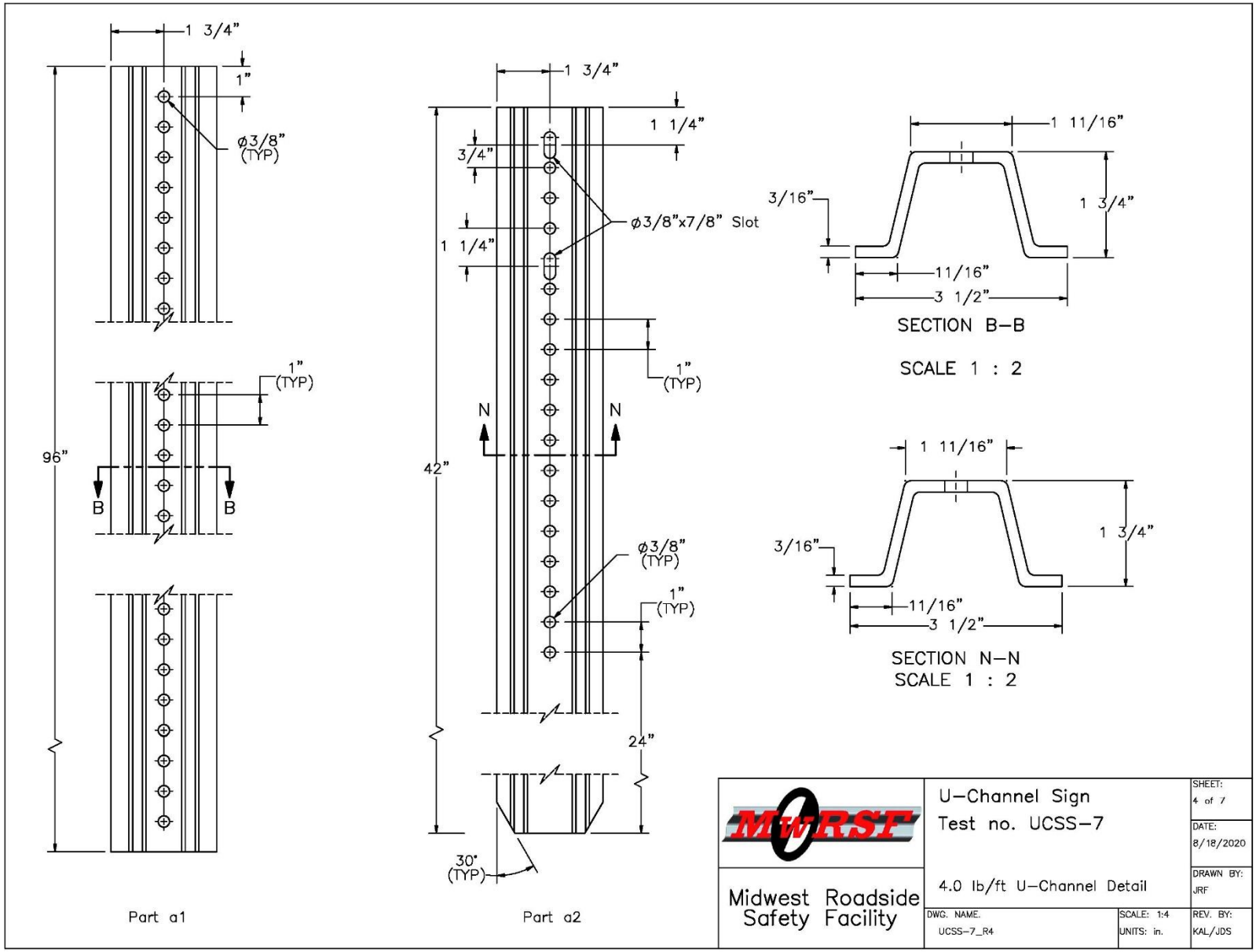

Figure 86. U-Channel Detail, Test No. UCSS-7

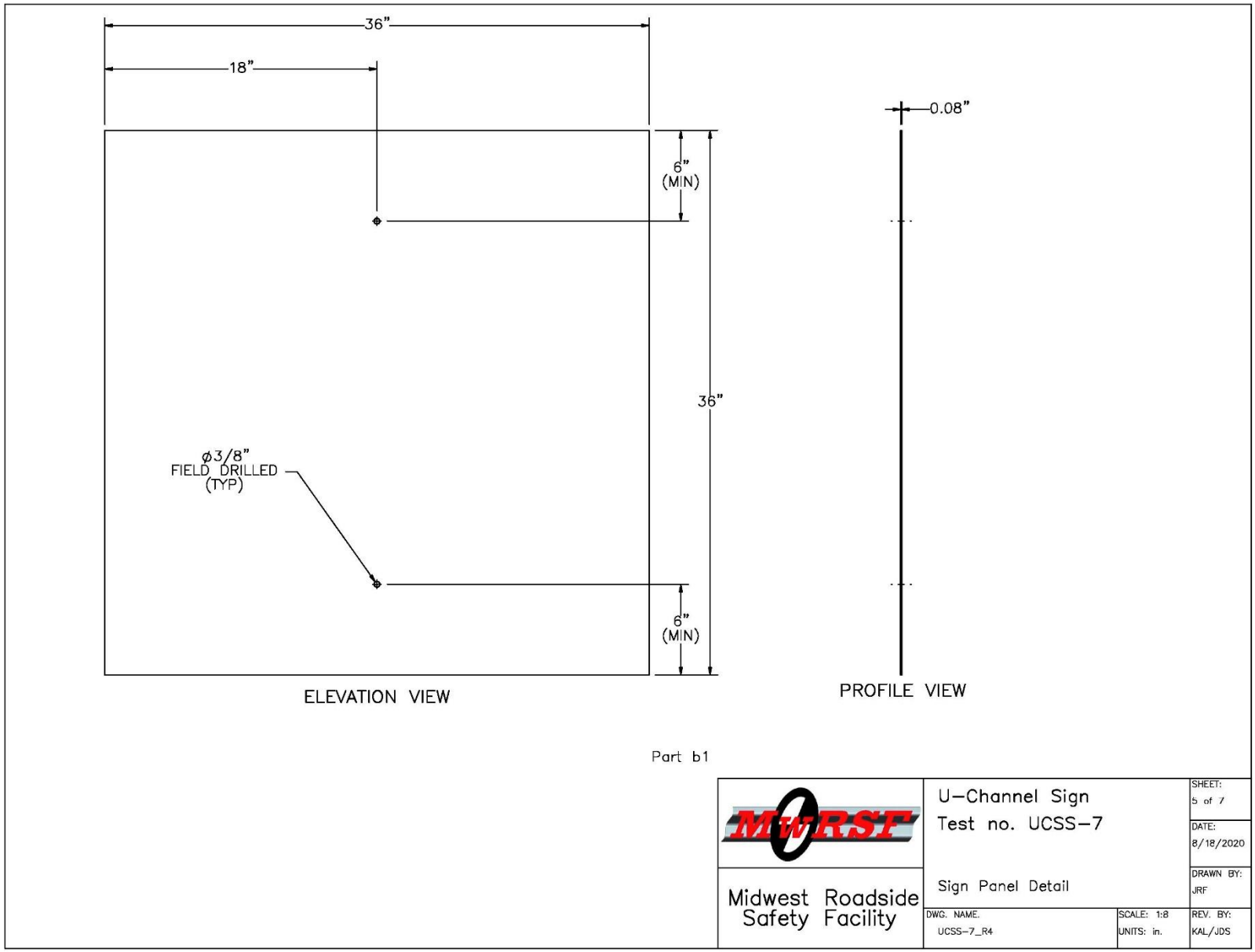

Figure 87. Sign Panel Detail, Test No. UCSS-7

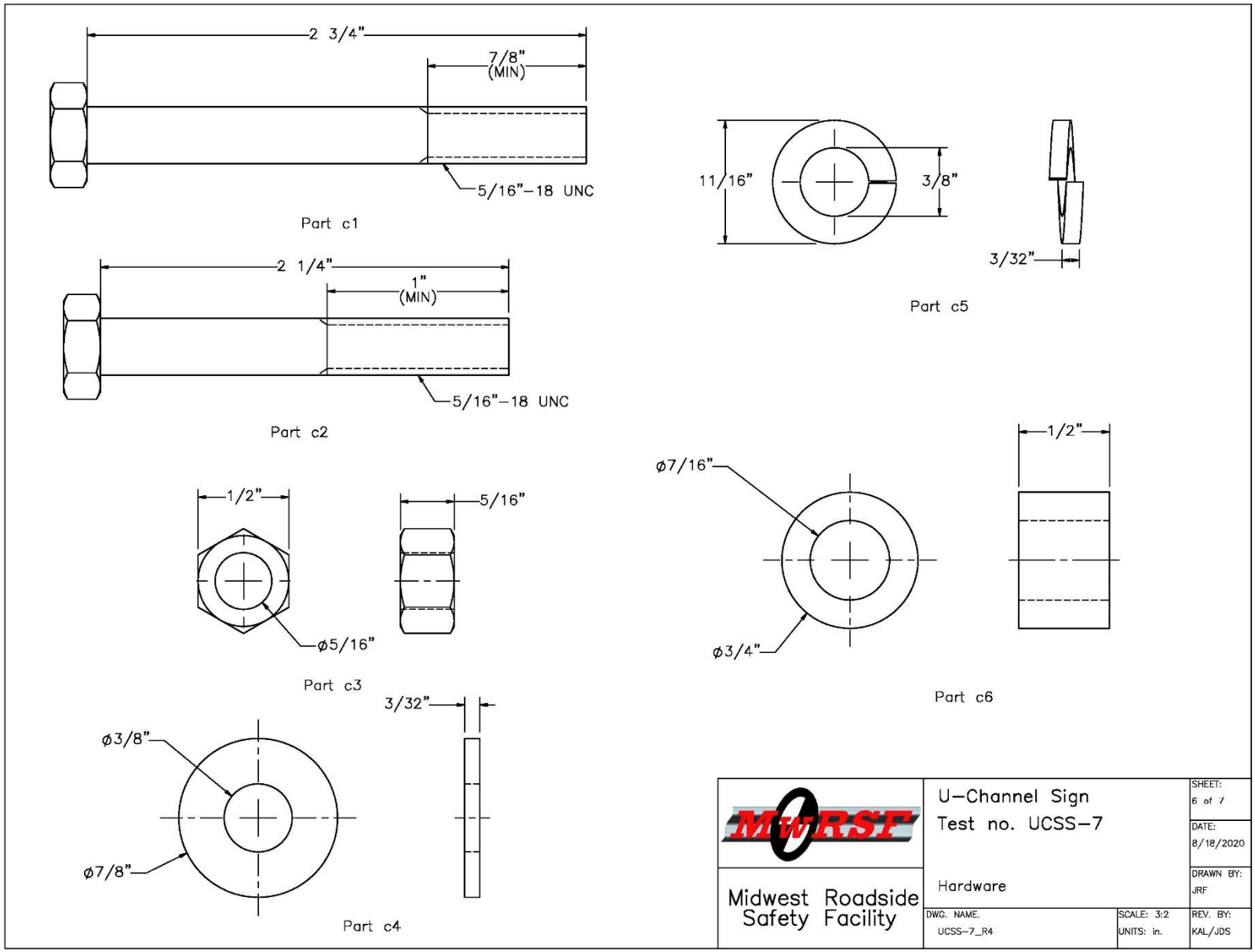

Figure 88. Hardware, Test No. UCSS-7

Item No.	QTY.	Description	Material Specification	Treatment Specification	Hardware Guide
a1	1	4.00 lb/ft U–Channel Sign Post, 96" Long	ASTM A499 Gr. 60 Min. Yield = 60 ksi	ASTM A123	–
a2	1	4.00 lb/ft U–Channel Sign Post, 42" Long	ASTM A499 Gr. 60 Min. Yield = 60 ksi	ASTM A123	–
b1	1	36"x36"x0.08" Sign with Reflective Sheeting	Aluminum Alloy 5052 or Similar	–	–
c1	2	5/16"–18 UNC, 2 3/4" Long Hex Bolt	SAE J429 Gr. 5 or 9	Fe/ZN 3AN per ASTM F1941	FBX08b
c2	2	5/16"–18 UNC, 2 1/4" Long Hex Bolt	SAE J429 Gr. 9	Zinc–Plated	–
c3	4	5/16"–18 UNC Heavy Hex Nut	SAE J995 Gr. 5 or 9	Fe/Zn 3AN per ASTM F1941	FNX08b
c4	8	5/16" Dia. Plain Round Washer	Low Carbon Steel	Fe/Zn 3AN per ASTM F1941	FWC08a
c5	4	3/8" Dia. Lock Washer	Low Carbon Steel	Fe/Zn 3AN per ASTM F1941	–
c6	2	ø3/4"x1/2" Post Spacer	As Supplied	Zinc–Plated	–

* Part c2 may be 2 or 2 1/4 in. in length

MwRSF Midwest Roadside Safety Facility	U–Channel Sign Test no. UCSS–7		SHEET: 7 of 7
			DATE: 8/18/2020
	Bill of Materials		DRAWN BY: JRF
	DWG. NAME. UCSS–7_R4	SCALE: 1:192 UNITS: in.	REV. BY: KAL/JDS

Figure 89. Bill of Materials, Test No. UCSS-7

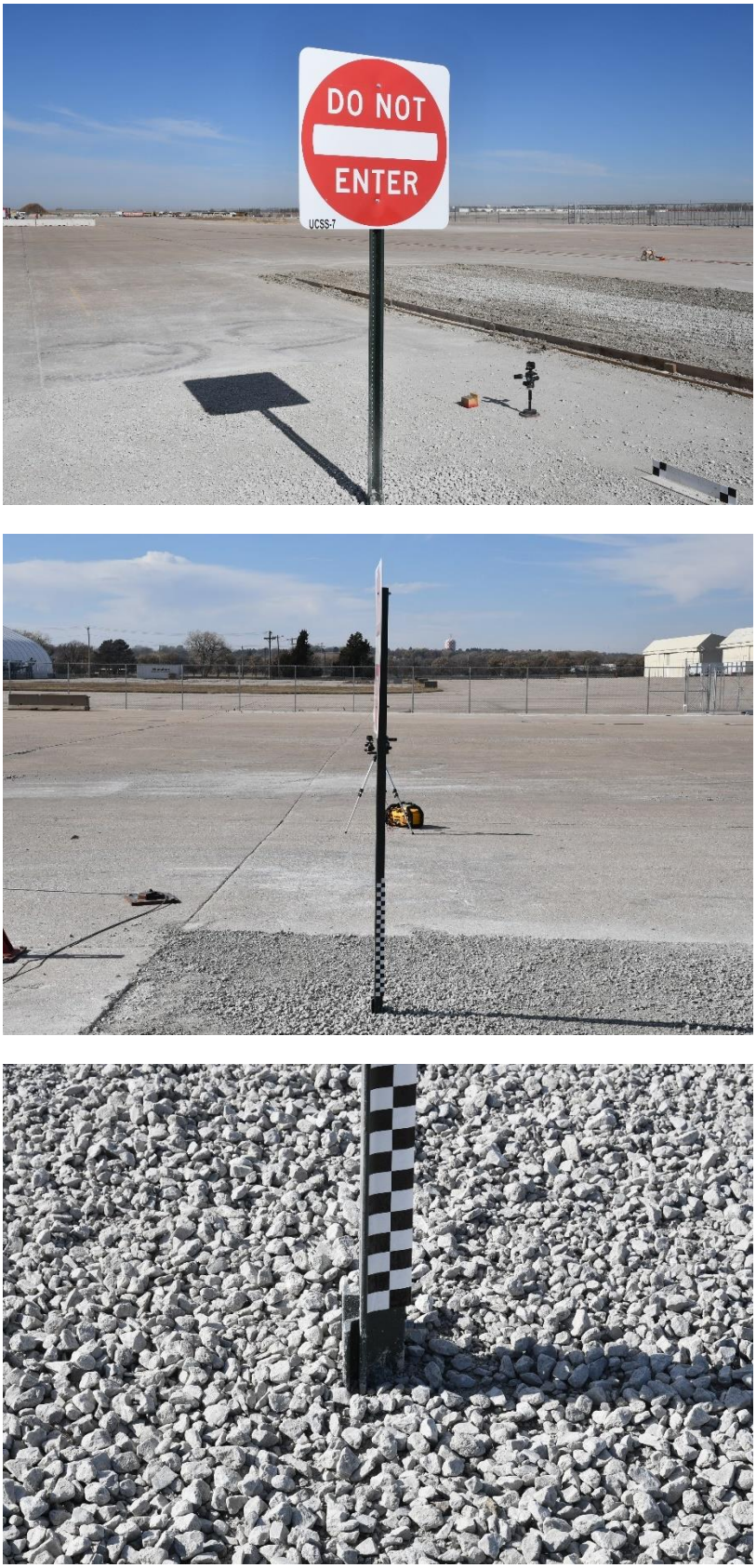

Figure 90. Sign Installation, Test No. UCSS-7

7.1 Weather Conditions

Test no. UCSS-7 was conducted on November 4, 2020 at approximately 12:00 p.m. The weather conditions as per the National Oceanic and Atmospheric Administration (station 14939/LNK) were reported and are shown in Table 15.

Table 15. Weather Conditions, Test No. UCSS-7

Temperature	70° F
Humidity	38%
Wind Speed	9 mph
Wind Direction	210° from True North
Sky Conditions	Sunny
Visibility	9.9 Statute Miles
Pavement Surface	Dry
Previous 3-Day Precipitation	0.00 in.
Previous 7-Day Precipitation	0.00 in.
Soil Moisture Content	4.93%

7.2 Test Description

The 2,408-lb surrogate, reusable, 1100C test vehicle impacted the single, U-channel sign support installation at a speed of 19.8 mph and at an angle of 0 degrees. Impact occurred at the centerline of the surrogate vehicle's front bumper, as shown in Figure 91. The surrogate vehicle came to rest downstream from the installation after brakes were applied. A detailed description of the sequential impact events is contained in Table 16. Sequential photographs are shown in Figure 92. Documentary photographs of the crash test are shown in Figures 93 and 94.

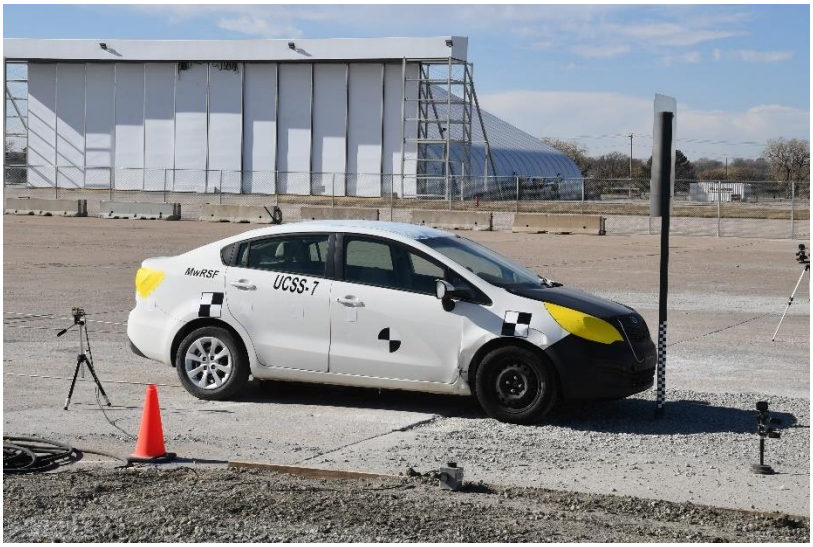

Figure 91. Impact Location, Test No. UCSS-7

Table 16. Sequential Description of Impact Events, Test No. UCSS-7

TIME (sec)	EVENT
0.000	Vehicle's front bumper contacted bottom of sign support at 19.8 mph and 0 degrees.
0.014	Sign support fractured at bumper height.
0.017	Disengaged sign and post lost contact with front bumper.
0.194	Top of sign panel contacted windshield.
0.214	Windshield deformed inward.
0.337	Sign panel lost contact with vehicle.
0.514	Vehicle cleared sign support stub at 18.6 mph.

0.000 sec

0.100 sec

0.200 sec

0.300 sec

0.400 sec

0.500 sec

0.000 sec

0.100 sec

0.200 sec

0.300 sec

0.400 sec

0.500 sec

Figure 92. Additional Sequential Photographs, Test No. UCSS-7

Figure 93. Documentary Photographs, Test No. UCSS-7

Figure 94. Additional Documentary Photographs, Test No. UCSS-7

7.3 Sign Panel and U-Channel Support Damage

System damage is shown in Figure 95. The system was impacted 23¾ in. above the ground. The U-channel sign support fractured approximately 45 in. from the bottom of the sign panel. The fractured 19-in. length of the sign support was partially disengaged from the sign support stub with the upper stub bolt disengaged. Minor deformation occurred at the top of the sign panel. The sign support stub was undamaged and extended approximately 4 in. above the ground line. It was noted that the system damage was very similar to the system damage observed during test no. UCSS-4, in which only the top bolt connecting the sign support to the foundation stub was disengaged.

7.4 Surrogate, Reusable, 1100C Test Vehicle Damage

The surrogate, reusable, 1100C test vehicle sustained minor damage, as shown in Figure 96. Damage consisted of minor deformation and contact marks at the centerline of the front bumper, where impact with the sign support occurred. The center of the windshield was cracked where the secondary sign impact occurred. The maximum windshield deformation was 2.3 in., as measured by LIDAR scanning and shown in Figure 97, and no holes were observed in the windshield. While undercarriage contact with the fractured sign support occurred, excessive occupant compartment deformation did not occur, and the limits established in MASH 2016 for the various areas of the occupant compartment were not violated. Following test no. UCSS-7, the windshield on the surrogate, reusable, 1100C test vehicle was repaired/replaced for the subsequent test.

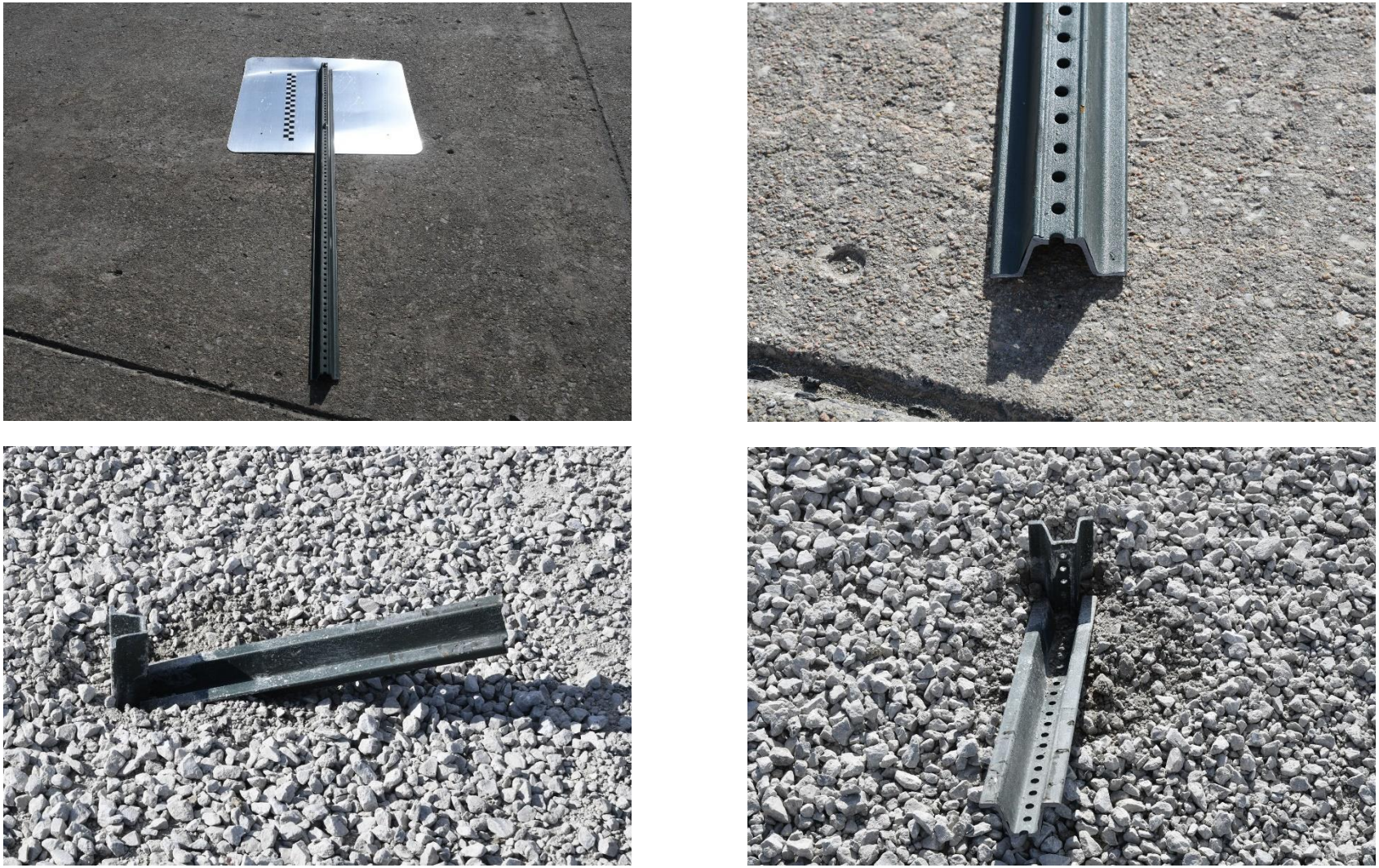

Figure 95. Sign Installation Damage, Test No. UCSS-7

Figure 96. Vehicle Damage, Test No. UCSS-7

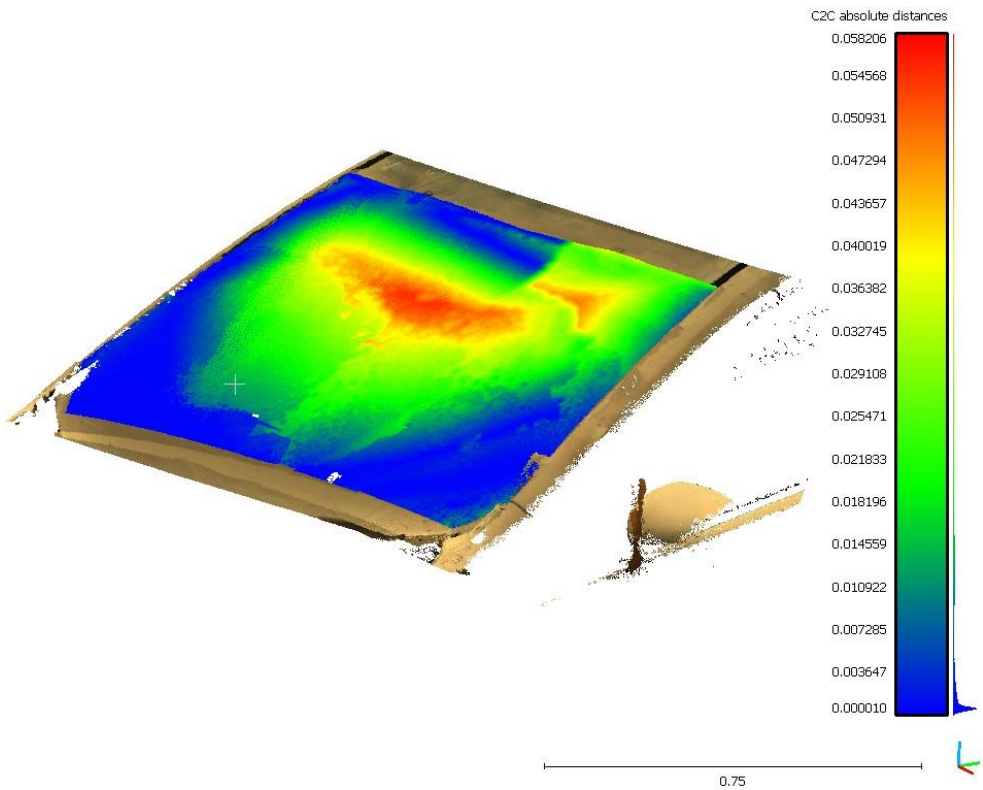

Figure 97. Vehicle Windshield Deformation, Test No. UCSS-7 (units = m), Maximum Deformation = 2.3 in.

7.5 Occupant Risk

The calculated OIVs and ORAs in both the longitudinal and lateral directions are shown in Table 17. It is important to note that in the test, the impulse on the vehicle was relatively small and of short duration. Thus, *x* and *y* in the flail-space model were less than 2 ft and 1 ft, respectively, during the period when the vehicle was in contact with the system. As specified in Section A5.5.2 of MASH 2016, in such cases, it was recommended that the OIV be set equal to the vehicle's change in velocity that occurred during contact with the test article, or parts thereof [1]. If parts of the test article remain with the vehicle after impact, the vehicle's change in velocity should be computed at the time the vehicle clears the footing or foundation of the test article. For test no. UCSS-7, the OIV, or in this case, the vehicle change in velocity, was reported when the vehicle lost contact with the test article. Note that the OIVs and ORAs were within suggested limits, as provided in MASH 2016. The calculated THIV, PHD, and ASI values are also shown in Table 17.

Table 17. Summary of OIV, ORA, THIV, PHD, and ASI Values, Test No. UCSS-7

Evaluation Criteria		Transducer		MASH 2016 Limits
		SLICE-1 (primary)	SLICE-2	
OIV ft/s	Longitudinal	-1.71	-1.50	±16
	Lateral	-0.29	-0.44	±16
ORA g's	Longitudinal	N/A	N/A	±20.49
	Lateral	N/A	N/A	±20.49
Maximum Angular Displacement deg.	Roll	-0.4	-0.5	±75
	Pitch	-0.4	-0.6	±75
	Yaw	-0.2	-0.1	not required
THIV ft/s		0.00	0.00	not required
PHD g's		3.78	3.92	not required
ASI		0.07	0.05	not required

Note: The vehicle cleared the test article foundation at 0.514 sec after impact for test no. UCSS-7, which was used to determine vehicle change in velocity, denoted as OIV.

N/A = Not Applicable

7.6 Discussion

The analysis of the test results for test no. UCSS-7 showed that the system readily activated in a predictable manner when impacted by the surrogate, reusable, 1100C test vehicle. A summary of the test results and sequential photographs are shown in Figure 98. Detached elements, fragments, or other debris from the test article did not penetrate or show potential for penetrating the occupant compartment, or present an undue hazard to other traffic, pedestrians, or work-zone personnel. Deformations of, or intrusions into, the occupant compartment that could have caused serious injury did not occur. Vehicle roll, pitch, and yaw angular displacements were deemed acceptable, because they did not adversely influence occupant risk nor cause rollover. Therefore, test no. UCSS-7 is anticipated to be acceptable according to the MASH 2016 safety performance criteria for test designation no. 3-60.

0.000 sec | 0.050 sec | 0.150 sec | 0.250 sec | 0.400 sec

- Test Agency ..... MwRSF
- Test Number UCSS-7
- Date 11/4/2020
- Representative MASH 2016 Test Designation No. 3-60
- Test Article ..... 5-ft tall, 4 lb/ft U-channel marker sign
- Key Component – Aluminum Sign Panel
  - Dimensions ..... 36 in. x 36 in. x 0.08 in.
  - Mounting Height (Bottom of Sign) ..... 5 ft
- Key Component – U-Channel Sign Support
  - Length (Upper Support) ..... 96 in.
  - Length (Lower Stub) ..... 42 in.
  - Embedment ..... 38 in.
- Soil Type ..... Coarse, crushed limestone (well-graded gravel)
- Vehicle Make /Model ..... Surrogate, Reusable, 1100C Test Vehicle
  - Curb ..... 2,480 lb
  - Test Inertial ..... 2,408 lb
  - Gross Static ..... 2,421 lb
- Impact Conditions
  - Speed ..... 19.8 mph
  - Angle ..... 0 deg.
  - Impact Location ..... Vehicle Centerline
- Kinetic Energy ..... 31.6 kip-ft < 34 kip-ft Limit from MASH 2016
- Exit Conditions
  - Speed ..... 18.6 mph
  - Angle ..... 0 deg.
- Vehicle Stability ..... Satisfactory
- Vehicle Stopping Distance ..... N/A
- Vehicle Damage ..... Minor
  - Parts in Need of Replacement ..... Windshield
  - Maximum Interior Deformation ..... 2.3 in.

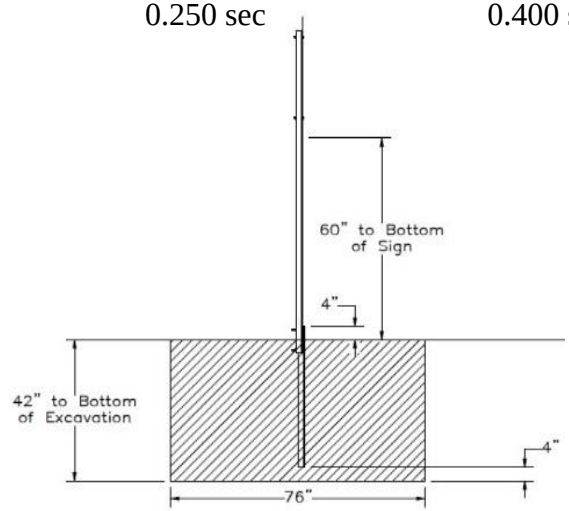

- Transducer Data

Evaluation Criteria		Transducer		MASH 2016 Limit
		SLICE-1 (primary)	SLICE-2	
OIV ft/s	Longitudinal	-1.71	-1.50	±16
	Lateral	-0.29	-0.44	±16
ORA g's	Longitudinal	N/A	N/A	N/A
	Lateral	N/A	N/A	N/A
Maximum Angular Displacement deg.	Roll	-0.4	-0.5	±75
	Pitch	-0.4	-0.6	±75
	Yaw	-0.2	-0.1	not required

Figure 98. Summary of Representative MASH Test Results and Sequential Photographs, Test No. UCSS-7

8 DIRECT EMBEDMENT 7-FT TALL 4-LB/FT U-CHANNEL SIGN INSTALLATION

8.1 Test Nos. UCSS-5 and UCSS-6 Design Details

The test installations for test nos. UCSS-5 and UCSS-6 consisted of a single U-channel sign support, as shown in Figures 99 through 105. Photographs of the test installations are shown in Figures 106 and 107. Material specifications, mill certifications, and certificates of conformity for the system materials are shown in Appendix F and Appendix G for test nos. UCSS-5 and UCSS-6, respectively.

The sign support was constructed with 4-lb/ft ASTM A499 Grade 80 U-channel, which supported a 36-in. x 36-in. x 0.08-in. aluminum sign panel with reflective sheeting. The sign panel was installed at a height of 7 ft measured from the bottom of the sign panel to the ground line. The sign support for test nos. UCSS-5 and UCSS-6 comprised a single, 154-in. long, U-channel sign support directly embedded into coarse, crushed limestone (well-graded gravel) at a depth of 38 in.

The purpose of conducting test nos. UCSS-5 and UCSS-6 was to evaluate the sign support system with impact conditions consistent with MASH test designation nos. 3-60 and 3-61, respectively. As noted, in order for sign support systems to receive MASH eligibility according to FHWA guidelines, each test in the MASH evaluation suite must be conducted. Results from test nos. UCSS-5 (MASH test designation no. 3-60) and UCSS-6 (MASH test designation no. 3-61) provide two of the three required evaluations according to MASH.

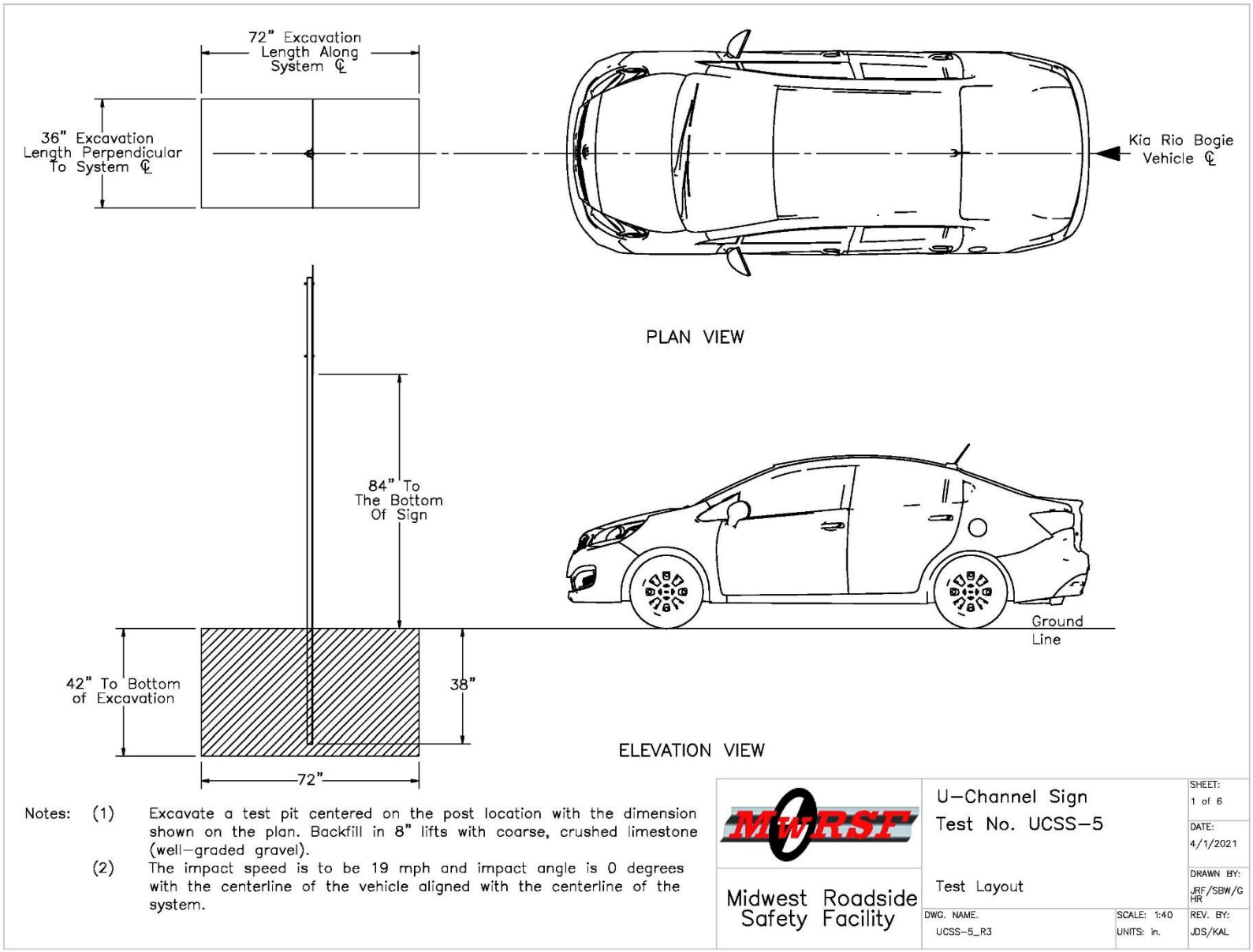

Figure 99. Test Installation Layout, Test No. UCSS-5

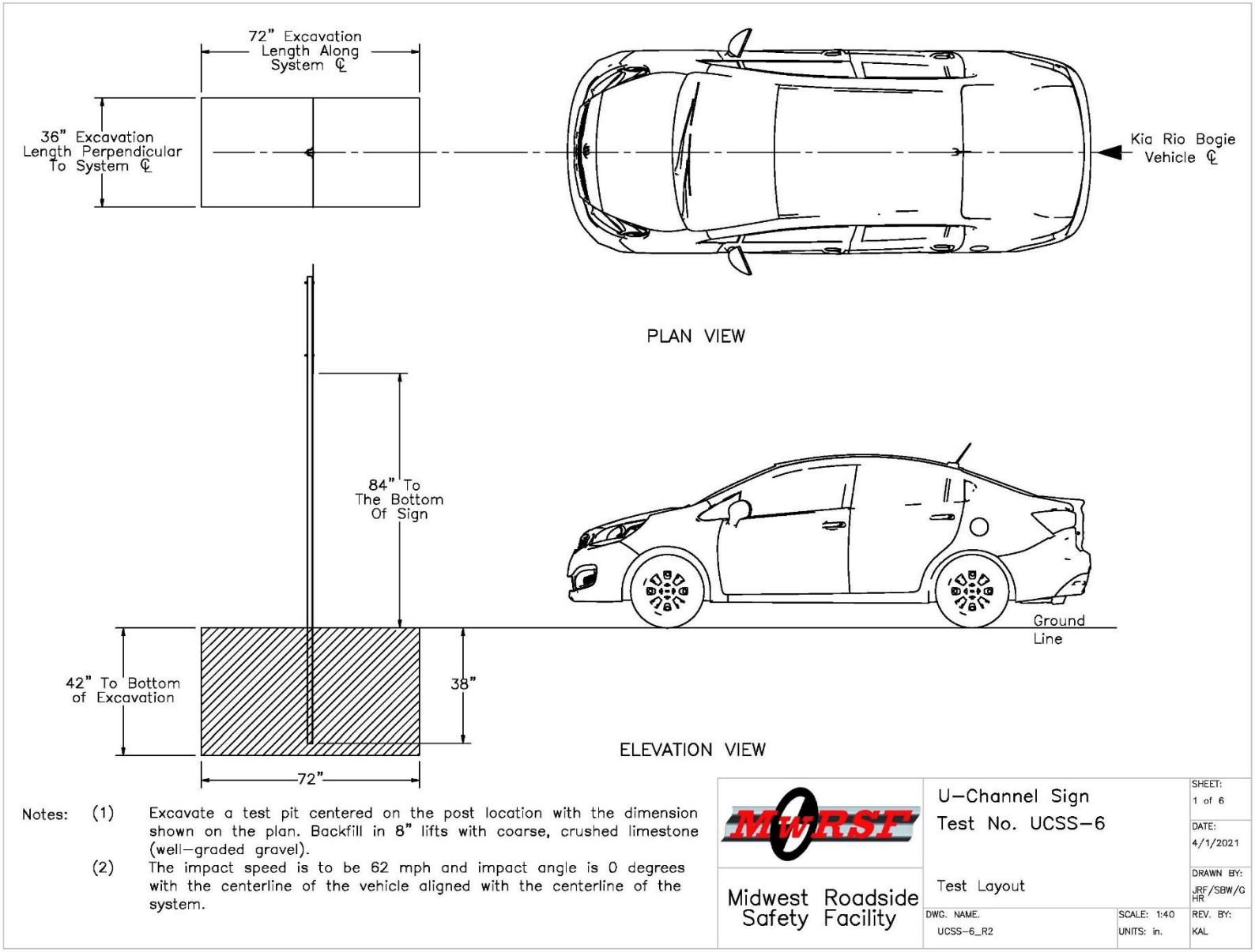

Figure 100. Test Installation Layout, Test No. UCSS-6

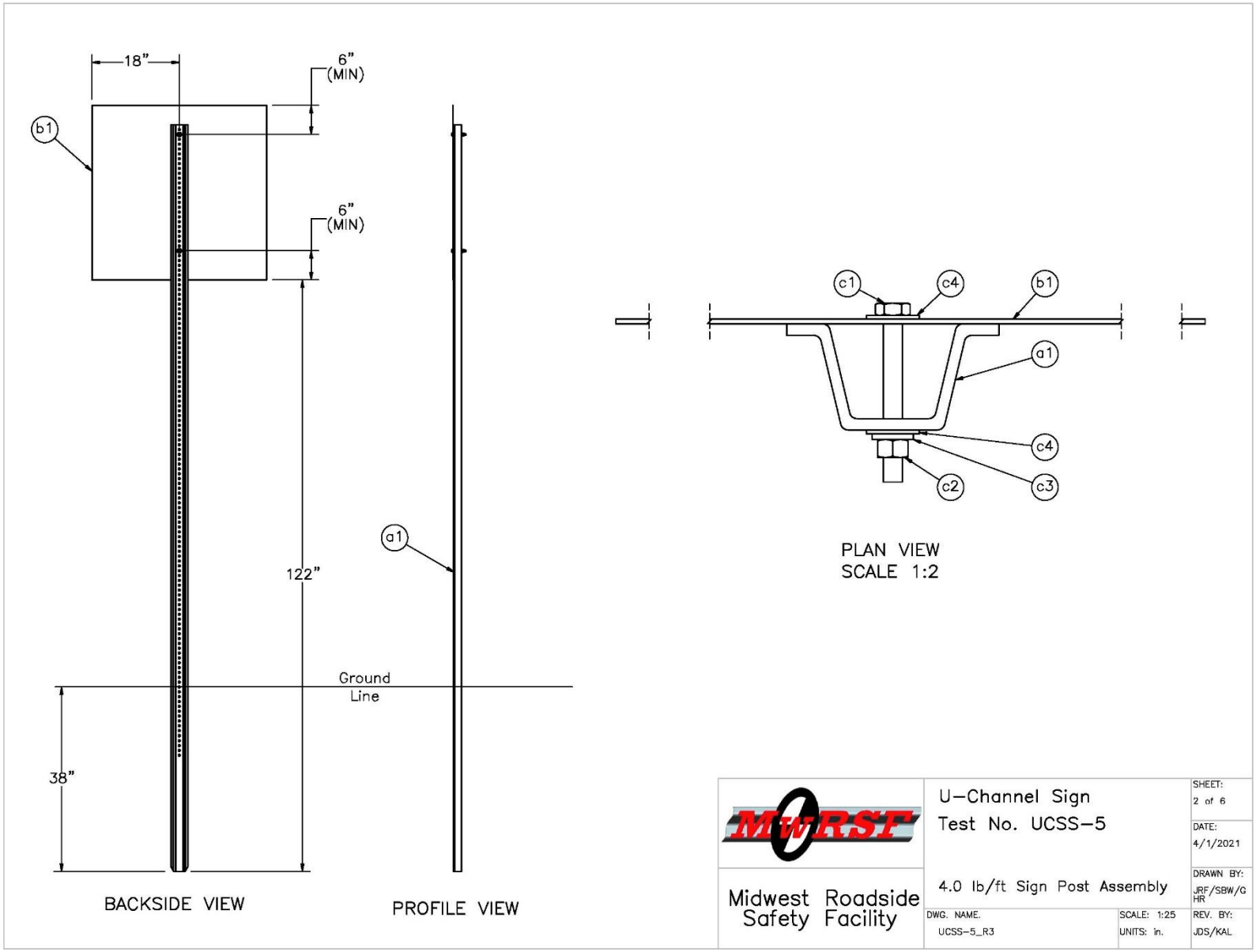

Figure 101. Sign Post Assembly, Test Nos. UCSS-5 and UCSS-6

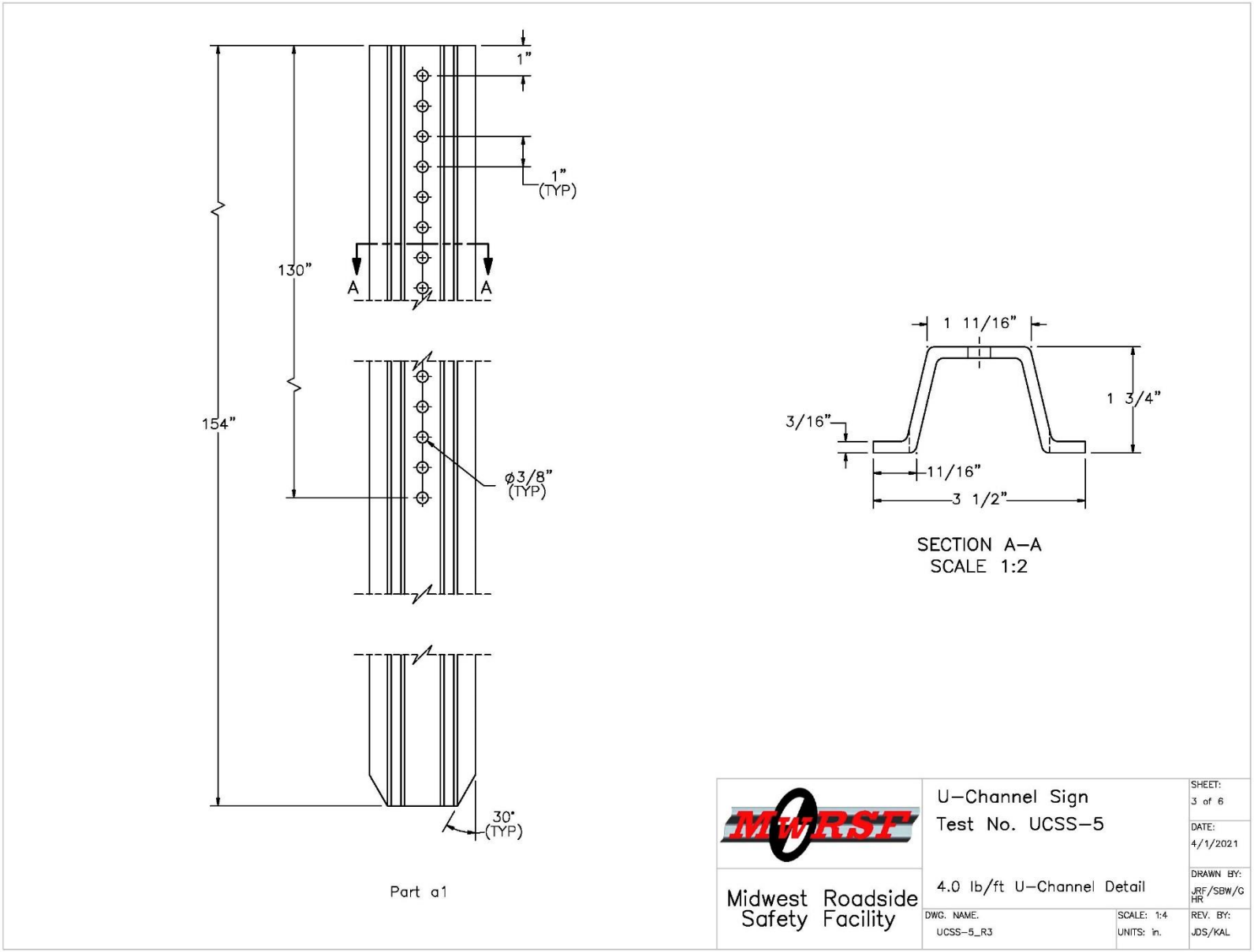

Figure 102. U-Channel Detail, Test Nos. UCSS-5 and UCSS-6

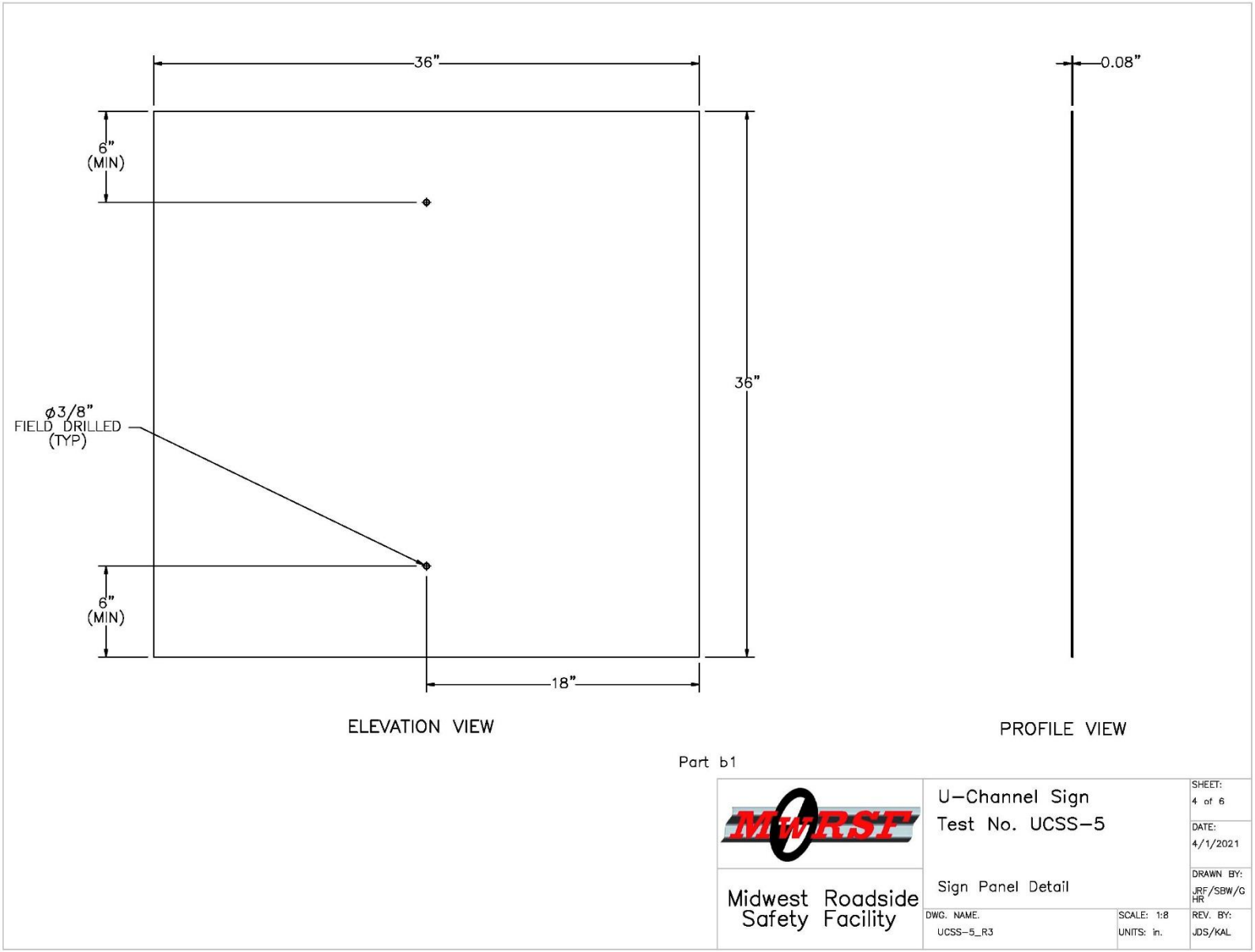

Figure 103. Sign Panel Detail, Test Nos. UCSS-5 and UCSS-6

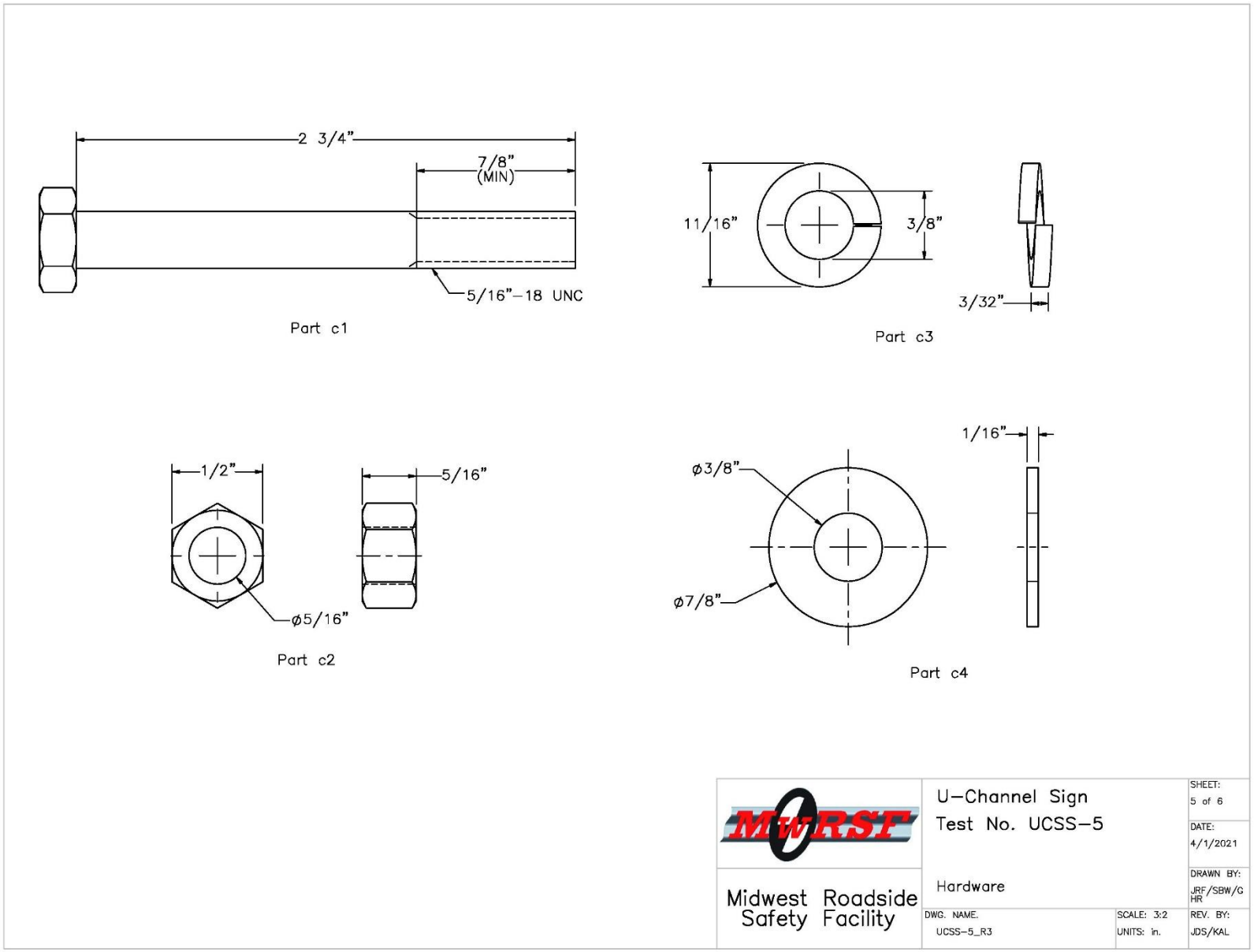

Figure 104. Hardware, Test Nos. UCSS-5 and UCSS-6

Item No.	QTY.	Description	Material Specification	Treatment Specification	Hardware Guide
a1	1	4.00 lb/ft U–Channel Sign Post, 154" Long	ASTM A499 Gr. 80 Min. Yield = 80 ksi	ASTM A123	PFP36
b1	1	36"x36"x0.08" Sign with Reflective Sheeting	Aluminum Alloy 5052 or Similar	–	–
c1	2	5/16"–18 UNC, 2 3/4" Long Hex Bolt	SAE J429 Gr. 5 or 9	Fe/ZN 3AN per ASTM F1941	FBX08b
c2	2	5/16"–18 UNC Heavy Hex Nut	SAE J995 Gr. 5 or 9	Fe/Zn 3AN per ASTM F1941	FNX08b
c3	2	3/8" Dia. Lock Washer	Low Carbon Steel	Fe/Zn 3AN per ASTM F1941	–
c4	4	5/16" Dia. Plain Round Washer	Low Carbon Steel	Fe/Zn 3AN per ASTM F1941	FWC08a

MwRSF Midwest Roadside Safety Facility	U–Channel Sign Test No. UCSS–5 Bill of Materials		SHEET: 6 of 6 DATE: 4/1/2021 DRAWN BY: JRF/SBW/GHR
	DWG. NAME. UCSS–5_R3	SCALE: None UNITS: in.	REV. BY: JDS/KAL

Figure 105. Bill of Materials, Test Nos. UCSS-5 and UCSS-6

Figure 106. Sign Installation, Test No. UCSS-5

Figure 107. Sign Installation, Test No. UCSS-6

8.2 Surrogate, Reusable, 1100C Test Vehicle Test No. UCSS-5

8.2.1 Weather Conditions

Test no. UCSS-5 was conducted on November 17, 2020 at approximately 12:00 p.m. The weather conditions as per the National Oceanic and Atmospheric Administration (station 14939/LNK) were reported and are shown in Table 18.

Table 18. Weather Conditions, Test No. UCSS-5

Temperature	53° F
Humidity	41%
Wind Speed	14 mph
Wind Direction	140° from True North
Sky Conditions	Sunny
Visibility	9.9 Statute Miles
Pavement Surface	Dry
Previous 3-Day Precipitation	0.04 in.
Previous 7-Day Precipitation	0.63 in.
Soil Moisture Content	3.20%

8.2.2 Test Description

The 2,408-lb surrogate, reusable, 1100C test vehicle impacted the single, U-channel sign support installation at a speed of 20.4 mph and at an angle of 0 degrees. Impact occurred at the centerline of the surrogate vehicle's front bumper, as shown in Figure 108. During the impact event, the surrogate vehicle's front wheels lost contact with the ground as the vehicle traversed the fractured post stub that remained embedded in the ground. The surrogate vehicle came to rest downstream from the installation after brakes were applied. A sequential description of the impact events is contained in Table 19. Sequential photographs are shown in Figure 109. Documentary photographs of the crash test are shown in Figures 110 and 111.

Figure 108. Impact Location, Test No. UCSS-5

Table 19. Sequential Description of Impact Events, Test No. UCSS-5

TIME (sec)	EVENT
0.000	Vehicle's front bumper contacted bottom of sign support at 20.4 mph and 0 degrees.
0.022	Sign support fractured at bumper height.
0.025	Sign support lost contact with vehicle's front bumper.
0.171	Vehicle's right-front tire left ground.
0.289	Sign panel contacted vehicle's windshield.
0.401	Sign panel lost contact with vehicle's windshield.
0.438	Vehicle's right-front tire re-contacted ground.
0.670	Vehicle cleared fractured post stub traveling at 15.6 mph.

0.000 sec

0.100 sec

0.200 sec

0.300 sec

0.400 sec

0.500 sec

0.000 sec

0.100 sec

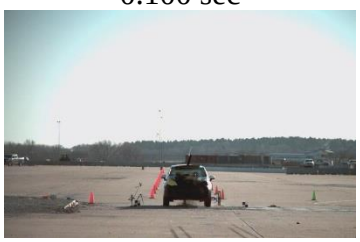
0.200 sec

0.300 sec

0.600 sec

0.900 sec

Figure 109. Additional Sequential Photographs, Test No. UCSS-5

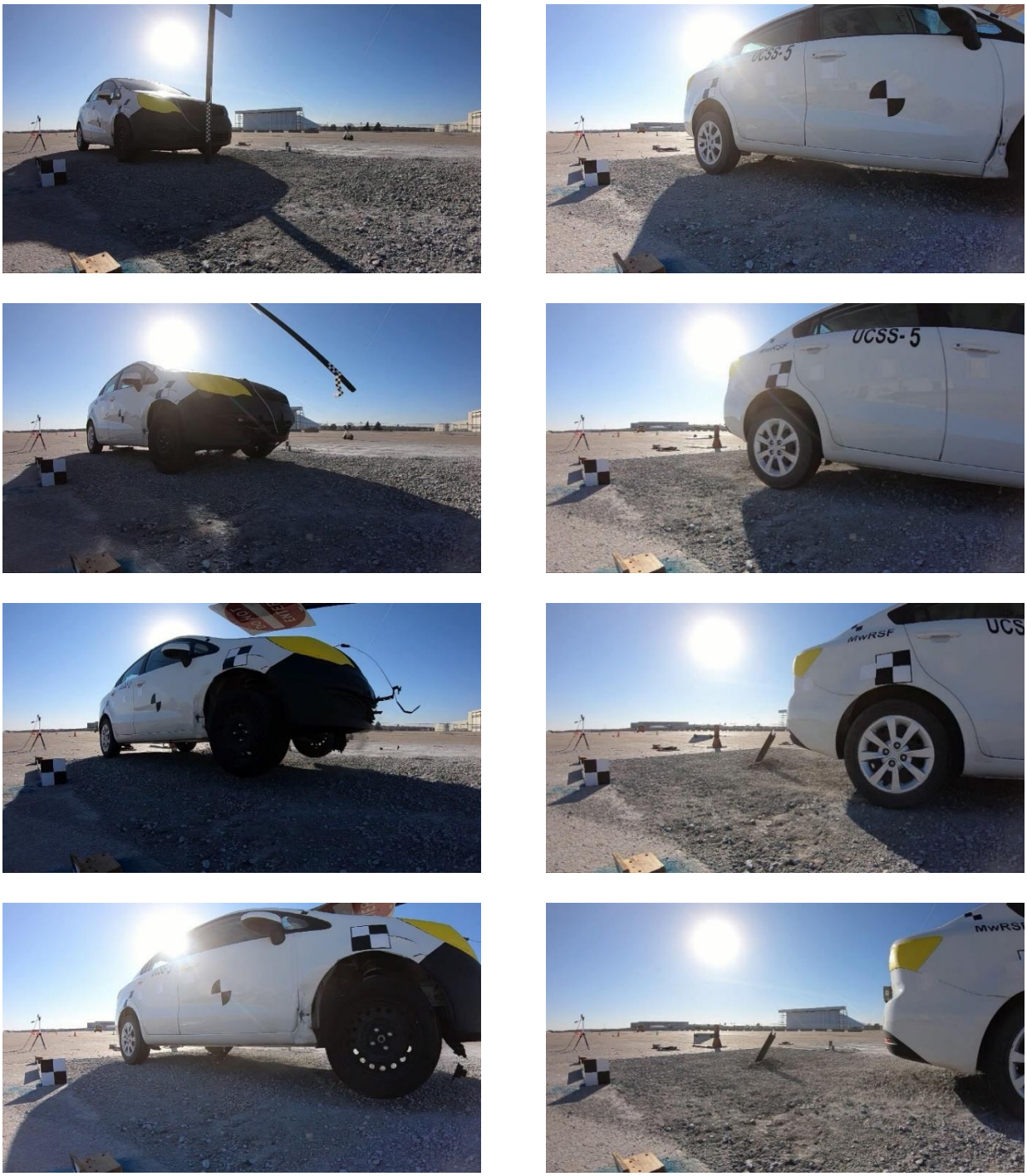

Figure 110. Documentary Photographs, Test No. UCSS-5

Figure 111. Additional Documentary Photographs, Test No. UCSS-5

8.2.3 Sign Panel and U-Channel Support Damage

System damage is shown in Figures 112 and 113. The system was impacted 23¾ in. above the ground. The U-channel sign support fractured approximately 63 in. from the bottom of the sign panel. The lower section of the sign support remained embedded in the ground and yielded backward, extending approximately 15 in. above the ground line. As shown in Figure 113, the lower section of the sign support fractured near the ground line along the perforation. The sign panel exhibited minor deformation along the top edge of the panel.

8.2.4 Surrogate, Reusable, 1100C Test Vehicle Damage

The surrogate, reusable, 1100C test vehicle sustained minor damage, as shown in Figure 114. Damage consisted of minor deformation and contact marks at the centerline of the front bumper where impact occurred. The windshield shattered where the secondary sign impact occurred. The maximum windshield deformation was 2.8 in., as measured by LIDAR scanning and shown in Figure 115. As shown in Figure 116, scraping was observed on the vehicle undercarriage, and the radiator ruptured due to contact with the lower section of U-channel post that remained embedded in the ground. Excessive occupant compartment deformation did not occur, and the limits established in MASH 2016 for the various areas of the occupant compartment were not violated. Following test no. UCSS-5, the windshield on the surrogate, reusable, 1100C test vehicle was replaced for the subsequent test.

Figure 112. Sign Installation Damage, Test No. UCSS-5

Figure 113. U-Channel Fractures, Test No. UCSS-5

Figure 114. Vehicle Damage, Test No. UCSS-5

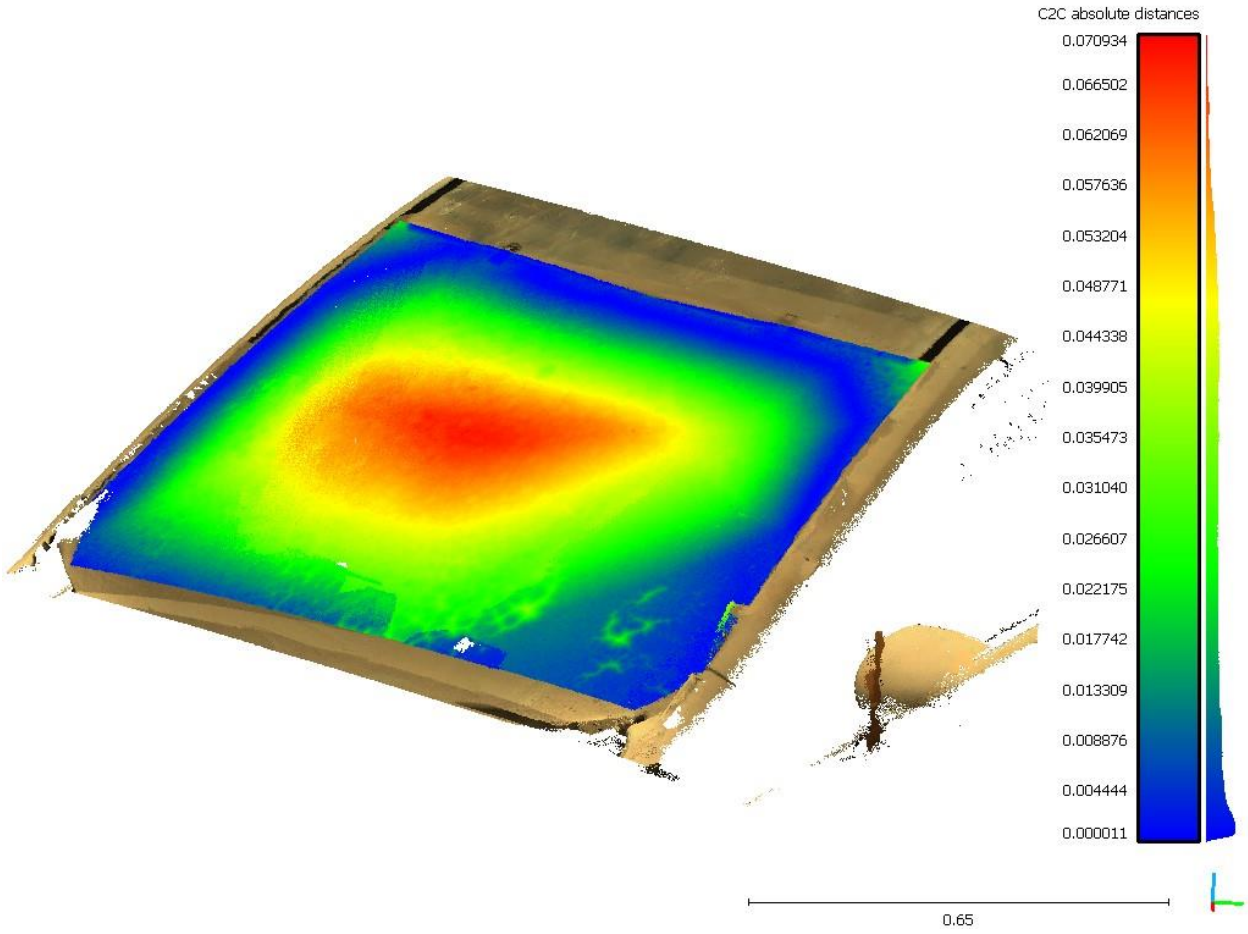

Figure 115. Vehicle Windshield Deformation, Test No. UCSS-5 (units = m), Maximum Deformation = 2.8 in.

Figure 116. Vehicle Undercarriage Damage, Test No. UCSS-5

8.2.5 Occupant Risk

The calculated OIVs and ORAs in both the longitudinal and lateral directions are shown in Table 20. It is important to note that in the test, the impulse on the vehicle was relatively small and of short duration. Thus, *x* and *y* in the flail-space model were less than 2 ft and 1 ft, respectively, during the period when the vehicle was in contact with the system. As specified in Section A5.5.2 of MASH 2016, in such cases, it was recommended that the OIV be set equal to the vehicle's change in velocity that occurred during contact with the test article, or parts thereof [1]. If parts of the test article remain with the vehicle after impact, the vehicle's change in velocity should be computed at the time the vehicle clears the footing or foundation of the test article. For test no. UCSS-5, the OIV, or in this case, the vehicle change in velocity, was reported when the vehicle lost contact with the test article. Note that the OIVs and ORAs were within suggested limits, as provided in MASH 2016. The calculated THIV, PHD, and ASI values are also shown in Table 20.

It should be noted that for sign support and breakaway device impacts, if the calculated t* occurs after the vehicle has completely passed the sign support, the OIV is considered to be equivalent to the vehicle's change in speed and the ORAs are not defined. For test no. UCSS-5, the calculated t* occurred before the vehicle completely passed over the sign support, and thus ORA values were reported.

Table 20. Summary of OIV, ORA, THIV, PHD, and ASI Values, Test No. UCSS-5

Evaluation Criteria		Transducer		MASH 2016 Limits
		SLICE-1 (primary)	SLICE-2	
OIV ft/s	Longitudinal	-7.02	-7.03	±16
	Lateral	0.07	-0.51	±16
ORA g's	Longitudinal	-1.77	-1.67	±20.49
	Lateral	-2.92	-3.61	±20.49
Maximum Angular Displacement deg.	Roll	1.2	1.3	±75
	Pitch	-3.9	-4.0	±75
	Yaw	1.5	1.4	not required
THIV ft/s		7.07	7.19	not required
PHD g's		3.00	3.61	not required
ASI		0.20	0.20	not required

8.2.6 Discussion

The analysis of the test results for test no. UCSS-5 showed that the system readily activated in a predictable manner when impacted by the surrogate, reusable, 1100C test vehicle. A summary of the test results and sequential photographs are shown in Figure 117. Detached elements, fragments, or other debris from the test article did not penetrate or show potential for penetrating the occupant compartment, or present an undue hazard to other traffic, pedestrians, or work-zone personnel. Deformations of, or intrusions into, the occupant compartment that could have caused serious injury did not occur. Vehicle roll, pitch, and yaw angular displacements were deemed acceptable, because they did not adversely influence occupant risk nor cause rollover. Therefore, test no. UCSS-5 is anticipated to be acceptable according to the MASH 2016 safety performance criteria for test designation no. 3-60.

Although acceptable safety performance was indicated using the surrogate, reusable, 1100C test vehicle, the dynamic behavior of the sign support was critical in test no. UCSS-5. The sign panel and upper mast rotated after fracturing near the bumper location and made direct, concentrated contact with the windshield, resulting in deformations which were close to the MASH limit of 3.0 in.

0.000 sec 0.100 sec 0.200 sec 0.300 sec 0.400 sec

- Test Agency ..... MwRSF
- Test Number UCSS-5
- Date 11/17/2020
- Representative MASH 2016 Test Designation No. 3-60
- Test Article ..... 7-ft tall, 4 lb/ft U-channel marker sign
- Key Component – Aluminum Sign Panel
  - Dimensions ..... 36 in. x 36 in. x 0.08 in.
  - Mounting Height (Bottom of Sign) ..... 7 ft
- Key Component – U-Channel Sign Support
  - Length ..... 154 in.
  - Embedment ..... 38 in.
- Soil Type ..... Coarse, crushed limestone (well-graded gravel)
- Vehicle Make /Model ..... Surrogate, Reusable, 1100C Test Vehicle
  - Curb ..... 2,480 lb
  - Test Inertial ..... 2,408 lb
  - Gross Static ..... 2,421 lb
- Impact Conditions
  - Speed ..... 20.4 mph
  - Angle ..... 0 deg.
  - Impact Location ..... Centerline of Front Bumper
- Kinetic Energy ..... 33.7 kip-ft < 34 kip-ft Limit from MASH 2016
- Exit Conditions
  - Speed ..... 15.6 mph
  - Angle ..... 0 deg.
- Vehicle Stability ..... Satisfactory
- Vehicle Stopping Distance ..... N/A
- Vehicle Damage ..... Minor
  - Parts in Need of Replacement ..... Windshield
  - Maximum Interior Deformation ..... 2.8 in.

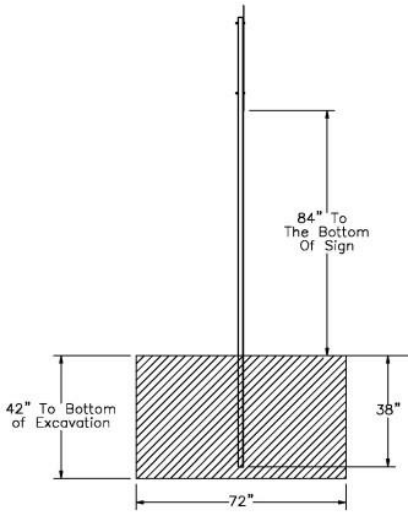

- Transducer Data

Evaluation Criteria		Transducer		MASH 2016 Limit
		SLICE-1 (primary)	SLICE-2	
OIV ft/s	Longitudinal	-7.02	-7.03	±16
	Lateral	0.07	-0.51	±16
ORA g's	Longitudinal	-1.77	-1.67	N/A
	Lateral	-2.92	-3.61	N/A
Maximum Angular Displacement deg.	Roll	1.2	1.3	±75
	Pitch	-3.9	-4.0	±75
	Yaw	1.5	1.4	not required

Figure 117. Summary of Representative MASH Test Results and Sequential Photographs, Test No. UCSS-5

8.3 Surrogate, Reusable, 1100C Test Vehicle Test No. UCSS-6

8.3.1 Weather Conditions

Test no. UCSS-6 was conducted on November 19, 2020 at approximately 12:00 p.m. The weather conditions as per the National Oceanic and Atmospheric Administration (station 14939/LNK) were reported and are shown in Table 21.

Table 21. Weather Conditions, Test No. UCSS-6

Temperature	69° F
Humidity	36%
Wind Speed	9 mph
Wind Direction	220° from True North
Sky Conditions	Sunny
Visibility	9.94 Statute Miles
Pavement Surface	Dry
Previous 3-Day Precipitation	0.00 in.
Previous 7-Day Precipitation	0.04 in.
Soil Moisture Content	4.49%

8.3.2 Test Description

The 2,408-lb surrogate, reusable, 1100C test vehicle impacted the single, U-channel sign support installation at a speed of 62.5 mph and at an angle of 0 degrees. Impact occurred at the centerline of the surrogate vehicle's front bumper, as shown in Figure 118. The surrogate vehicle came to rest downstream from the installation after brakes were applied. A detailed description of the sequential impact events is contained in Table 22. Sequential photographs are shown in Figure 119. Documentary photographs of the crash test are shown in Figures 120 and 121.

Figure 118. Impact Location, Test No. UCSS-6

Table 22. Sequential Description of Impact Events, Test No. UCSS-6

TIME (sec)	EVENT
0.000	Vehicle's front bumper contacted bottom of sign support at 62.5 mph and 0 degrees.
0.007	Sign support fractured at bumper height.
0.024	Sign support lost contact with vehicle's front bumper.
0.112	Sign panel contacted vehicle's rear roof.
0.128	Vehicle's rear window shattered.
0.178	Vehicle cleared sign support stub traveling at 60.5 mph.
0.186	Sign panel lost contact with vehicle.

0.000 sec

0.050 sec

0.100 sec

0.150 sec

0.200 sec

0.250 sec

0.000 sec

0.100 sec

0.200 sec

0.300 sec

0.400 sec

0.500 sec

Figure 119. Additional Sequential Photographs, Test No. UCSS-6

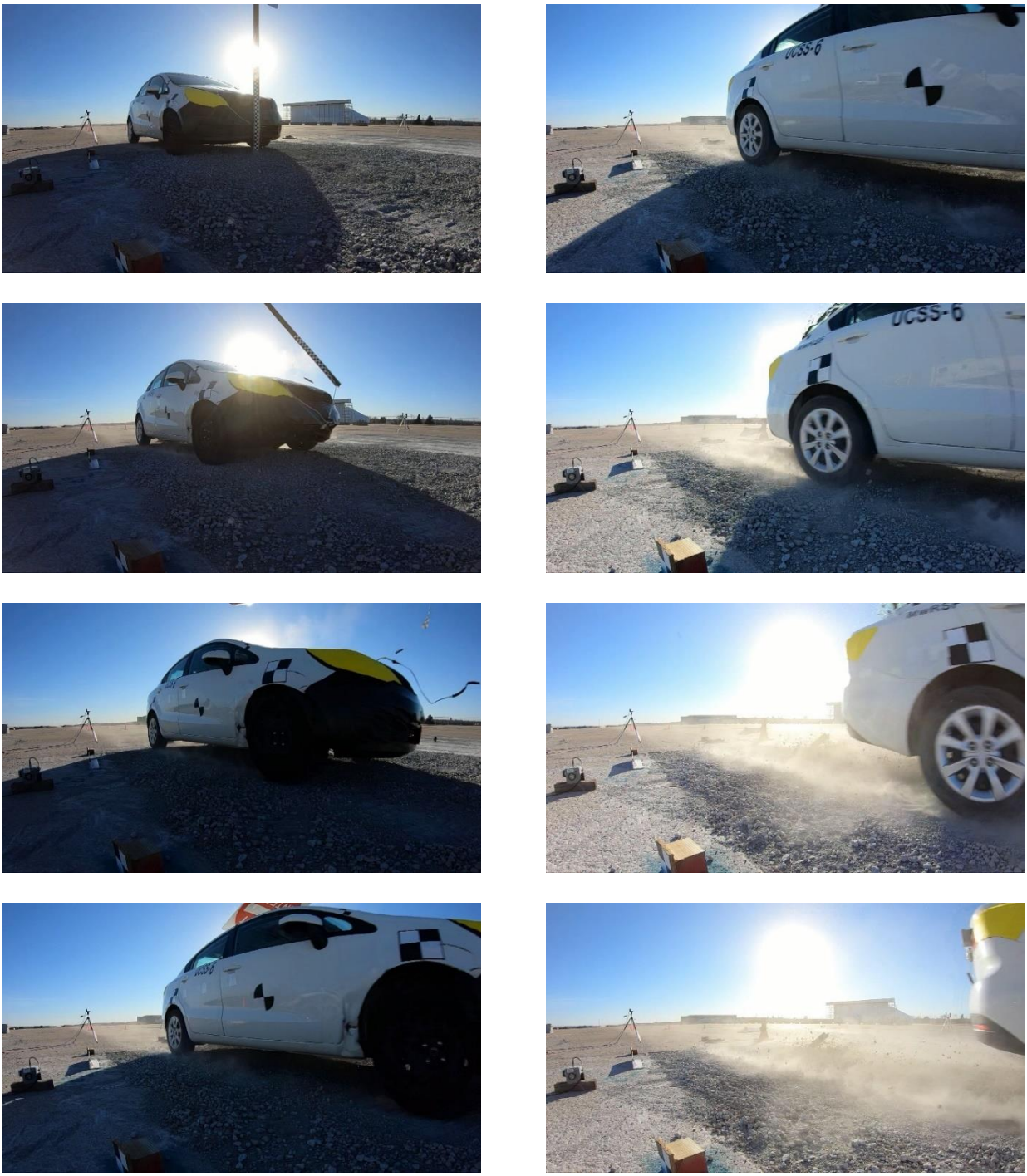

Figure 120. Documentary Photographs, Test No. UCSS-6

Figure 121. Additional Documentary Photographs, Test No. UCSS-6

8.3.3 Sign Panel and U-Channel Support Damage

System damage is shown in Figures 122 and 123. The system was impacted 23¾ in. above ground. The U-channel sign support fractured approximately 65 in. from the bottom of the sign panel. The lower section of the sign support remained embedded in the ground and yielded backward, extending approximately 10 in. above the ground line. As shown in Figure 122, the lower section of the sign support fractured near the ground line along the perforation. The sign panel exhibited deformation along the top edge of the panel.

8.3.4 Surrogate, Reusable, 1100C Test Vehicle Damage

The surrogate, reusable, 1100C test vehicle sustained moderate damage, as shown in Figure 124. Damage consisted of minor deformation and contact marks at the centerline of the front bumper where impact occurred. The rear of the roof was deformed across the approximate width of the vehicle, and the rear windshield shattered. The maximum roof deformation was 3.8 in., as measured by LIDAR scanning and shown in Figure 125. While undercarriage contact with the fractured sign support occurred, excessive occupant compartment deformations did not occur, and the limits established in MASH 2016 for the occupant compartment were not violated. Following test no. UCSS-6, the bumper and roof on the surrogate, reusable, 1100C test vehicle were repaired, and the rear windshield was replaced for the subsequent test.

Rear window shattering is considered unacceptable if the test article makes direct contact with the window and if there is any identifiable penetration of the test article into the occupant compartment, per AASHTO in May 2018 [14]:

> May 2018 #12. Is rear window damage (e.g., due to a tall breakaway or work zone device) cause for failure of a test?
>
> Currently, there are no defined criteria for rear window damage in MASH. Until additional research is conducted, no penetration of any element of the test article through the rear window is allowed. Deformation and/or shattering of the rear window is acceptable if within intrusion limits. A detailed description of the events surrounding the deformation and/or shattering event must be provided by the testing facility.

Based on available guidance, rear window shattering when bridged by a structural member or by damage to the roof or “C”-pillar are still considered acceptable, so long as other occupant compartment deformation limits are also satisfied. During test no. UCSS-6, the rear window was shattered due to roof deformation, but the test article did not make direct contact with the rear window.

Figure 122. U-Channel Fractures, Test No. UCSS-6

Figure 123. Sign Installation Damage, Test No. UCSS-6

Figure 124. Vehicle Damage, Test No. UCSS-6

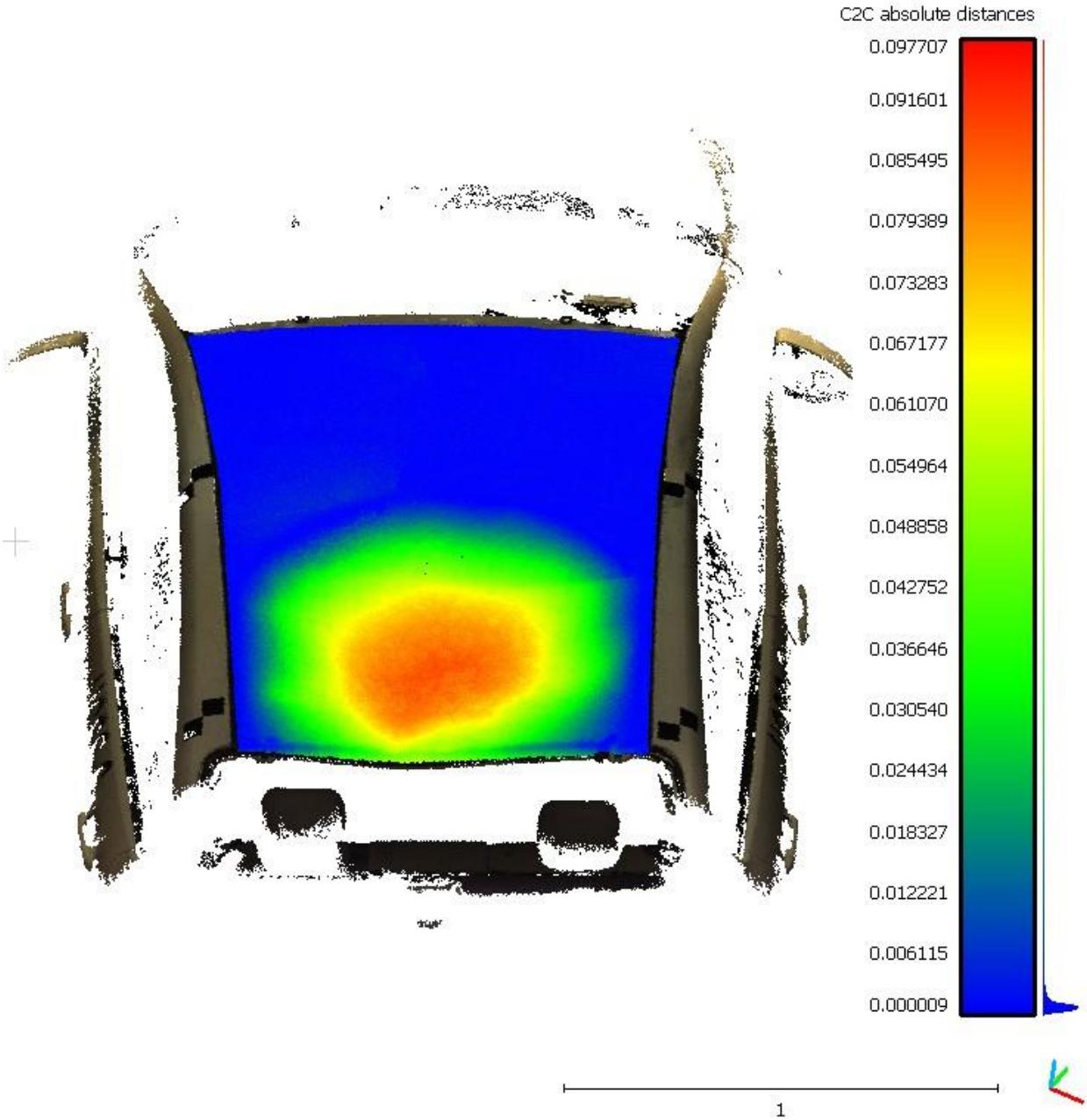

Figure 125. Vehicle Roof Deformation, Test No. UCSS-6 (units = m), Maximum Deformation = 3.8 in.

8.3.5 Occupant Risk

The calculated OIVs and ORAs in both the longitudinal and lateral directions are shown in Table 23. It is important to note that in the test, the impulse on the vehicle was relatively small and of short duration. Thus, *x* and *y* in the flail-space model were less than 2 ft and 1 ft, respectively, during the period when the vehicle was in contact with the system. As specified in Section A5.5.2 of MASH 2016, in such cases, it was recommended that the OIV be set equal to the vehicle's change in velocity that occurred during contact with the test article, or parts thereof [1]. If parts of the test article remain with the vehicle after impact, the vehicle's change in velocity should be computed at the time the vehicle clears the footing or foundation of the test article. For test no. UCSS-6, the OIV, or in this case, the vehicle change in velocity, was reported when the vehicle lost contact with the test article. Note that the OIVs and ORAs were within suggested limits, as provided in MASH 2016. The calculated THIV, PHD, and ASI values are also shown in Table 23.

Table 23. Summary of OIV, ORA, THIV, PHD, and ASI Values, Test No. UCSS-6

Evaluation Criteria		**Transducer**		**MASH 2016 Limits**
		SLICE-1 (primary)	**SLICE-2**	
OIV ft/s	Longitudinal	-2.88	-3.02	±16
	Lateral	0.21	0.37	±16
ORA g's	Longitudinal	N/A	N/A	±20.49
	Lateral	N/A	N/A	±20.49
Maximum Angular Displacement deg.	Roll	1.0	1.4	±75
	Pitch	1.4	1.3	±75
	Yaw	-0.1	-0.2	not required
THIV ft/s		0.00	0.00	not required
PHD g's		5.48	6.78	not required
ASI		0.21	0.21	not required

Note: The vehicle cleared the test article foundation at 0.178 sec after impact for test no. UCSS-6, which was used to determine vehicle change in velocity, denoted as OIV.

N/A = Not Applicable

8.3.6 Discussion

The analysis of the test results for test no. UCSS-6 showed that the system readily activated in a predictable manner when impacted by the surrogate, reusable, 1100C test vehicle. A summary of the test results and sequential photographs are shown in Figure 126. Detached elements, fragments, or other debris from the test article did not penetrate or show potential for penetrating the occupant compartment, or present an undue hazard to other traffic, pedestrians, or work-zone personnel. Deformations of, or intrusions into, the occupant compartment that could have caused serious injury did not occur. Vehicle roll, pitch, and yaw angular displacements were deemed acceptable, because they did not adversely influence occupant risk nor cause rollover. Therefore, test no. UCSS-6 is anticipated to be acceptable according to the MASH 2016 safety performance criteria for test designation no. 3-60.

The test article behavior during test no. UCSS-6 was critical, resulting in a concentrated impact on the roof of the surrogate, reusable, 1100C test vehicle and resulting in the shattering of the rear windshield. The maximum roof deformation was 3.8 in. It should be noted that the typical margin of error in collecting measurements is typically ±¼ in., meaning the MASH roof deformation limits were within the operating margin of error. With critical impact behavior also observed during test no. UCSS-5, care should be applied to determine what modifications, if any, could reduce the likelihood of critical behavior for both the small car and pickup truck test vehicles.

0.000 sec 0.050 sec 0.100 sec 0.150 sec 0.200 sec

- Test Agency ..... MwRSF
- Test Number UCSS-6
- Date 11/19/2020
- Representative MASH 2016 Test Designation No. 3-61
- Test Article ..... 7-ft tall, 4 lb/ft U-channel marker sign
- Key Component – Aluminum Sign Panel
  - Dimensions ..... 36 in. x 36 in. x 0.08 in.
  - Mounting Height (Bottom of Sign) ..... 7 ft
- Key Component – U-Channel Sign Support
  - Length ..... 154 in.
  - Embedment ..... 38 in.
- Soil Type ..... Coarse, crushed limestone (well-graded gravel)
- Vehicle Make /Model ..... Surrogate, Reusable, 1100C Test Vehicle
  - Curb ..... 2,480 lb
  - Test Inertial ..... 2,408 lb
  - Gross Static ..... 2,421 lb
- Impact Conditions
  - Speed ..... 62.5 mph
  - Angle ..... 0 deg.
  - Impact Location ..... Centerline of Front Bumper
- Kinetic Energy ..... 315.7 kip-ft > 288 kip-ft Limit from MASH 2016
- Exit Conditions
  - Speed ..... 60.5 mph
  - Angle ..... 0 deg.
- Vehicle Stability ..... Satisfactory
- Vehicle Stopping Distance ..... N/A
- Vehicle Damage ..... Moderate
  - Parts in Need of Replacement ..... Bumper, Rear Windshield, Roof (Repaired)
  - Maximum Interior Deformation ..... 3.8 in.

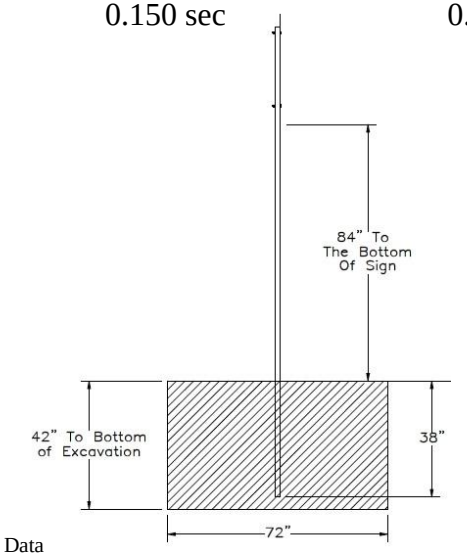

- Transducer Data

Evaluation Criteria		Transducer		MASH 2016 Limit
		SLICE-1 (primary)	SLICE-2	
OIV ft/s	Longitudinal	-2.88	-3.02	±16
	Lateral	0.21	0.37	±16
ORA g's	Longitudinal	N/A	N/A	N/A
	Lateral	N/A	N/A	N/A
Maximum Angular Displacement deg.	Roll	1.0	1.4	±75
	Pitch	1.4	1.3	±75
	Yaw	-0.1	-0.2	not required

Figure 126. Summary of Representative MASH Test Results and Sequential Photographs, Test No. UCSS-6

9 LAP SPLICE 7-FT TALL 3-LB/FT U-CHANNEL SIGN INSTALLATION

9.1 Test No. UCSS-8 Design Details

The test installation for test no. UCSS-8 consisted of a single, U-channel, sign support, as shown in Figures 127 through 133. Photographs of the test installation are shown in Figure 134. Material specifications, mill certifications, and certificates of conformity for the system materials are shown in Appendix H.

The sign supports were constructed with 3-lb/ft ASTM A499 Grade 60 U-channel, which supported a 36-in. x 36-in. x 0.08-in. aluminum sign panel with reflective sheeting. The sign panel was installed at a height of 7 ft, measured from the bottom of the sign panel to the ground line. The sign support for test no. UCSS-8 was comprised of a 120-in. long upper sign support that was attached to a 42-in. long anchor stub with a lap splice connection. The upper sign support and anchor stub were connected at the lap splice with two $^{5}/_{16}$-in. diameter x 2¼-in. long Grade 9 hex bolts, with ¾-in. diameter x ½-in. wide steel spacers placed between the two U-channel sections. The anchor stub was installed with a 38-in. embedment depth into coarse, crushed limestone (well-graded gravel).

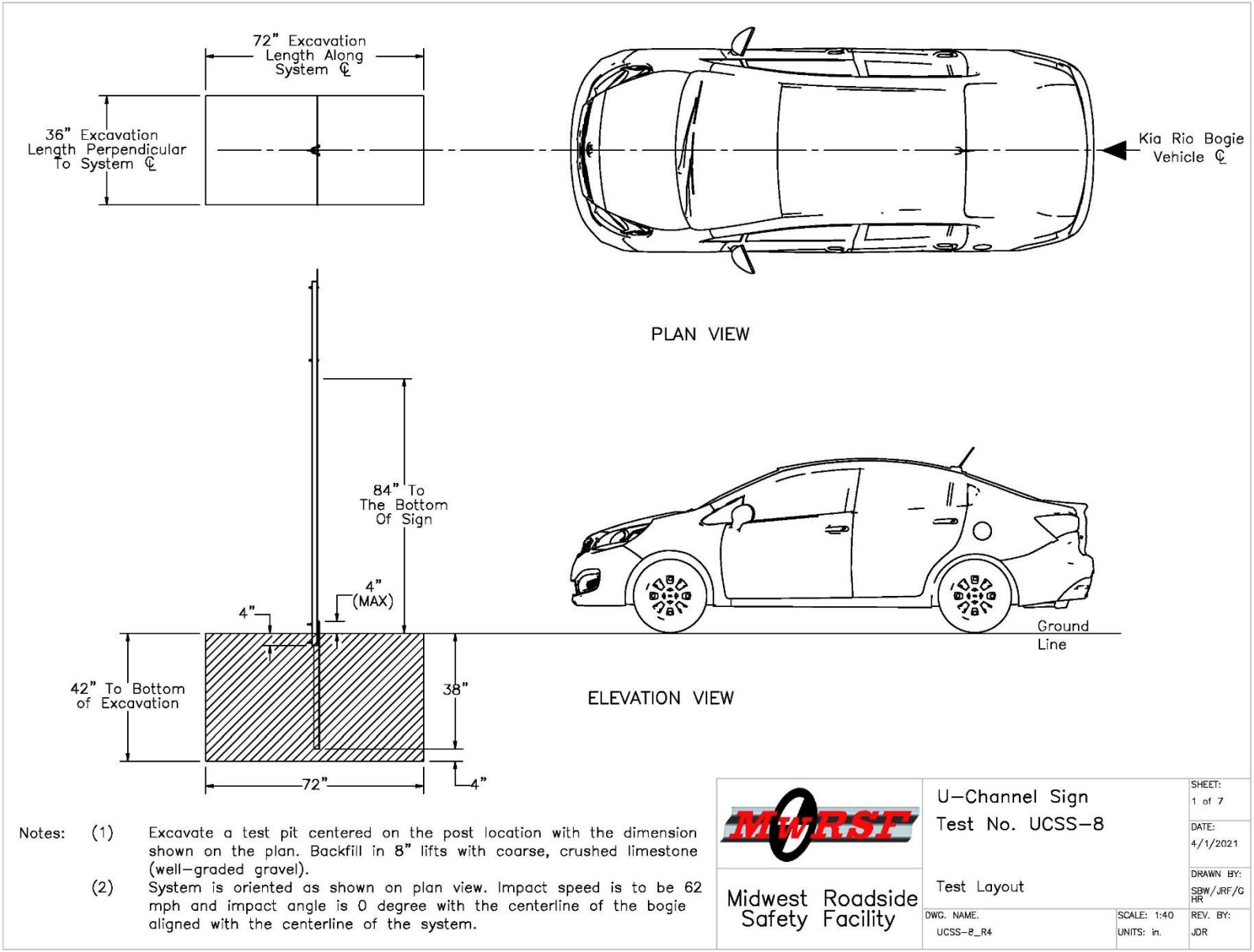

Figure 127. Test Installation Layout, Test No. UCSS-8

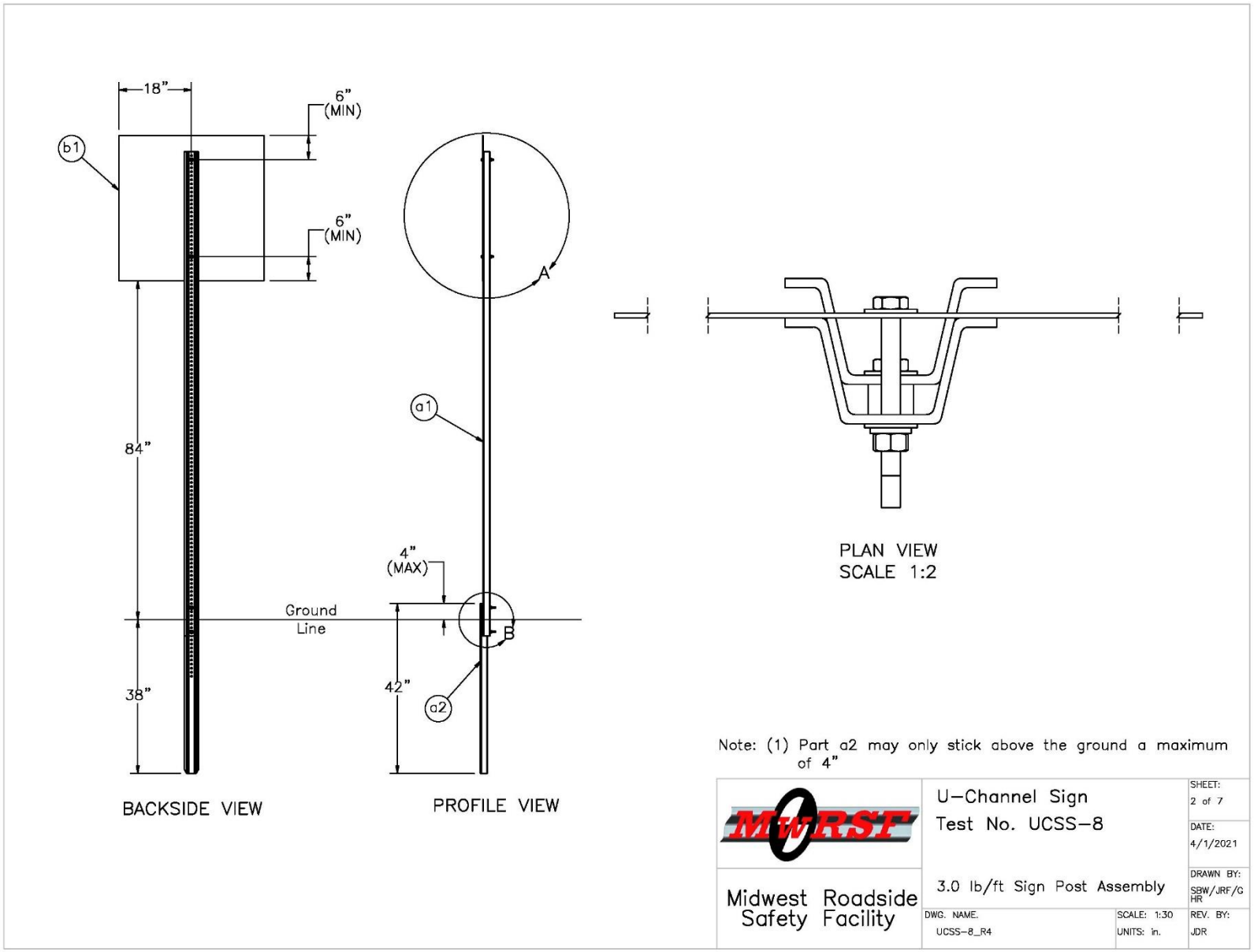

Figure 128. Sign Post Assembly, Test No. UCSS-8

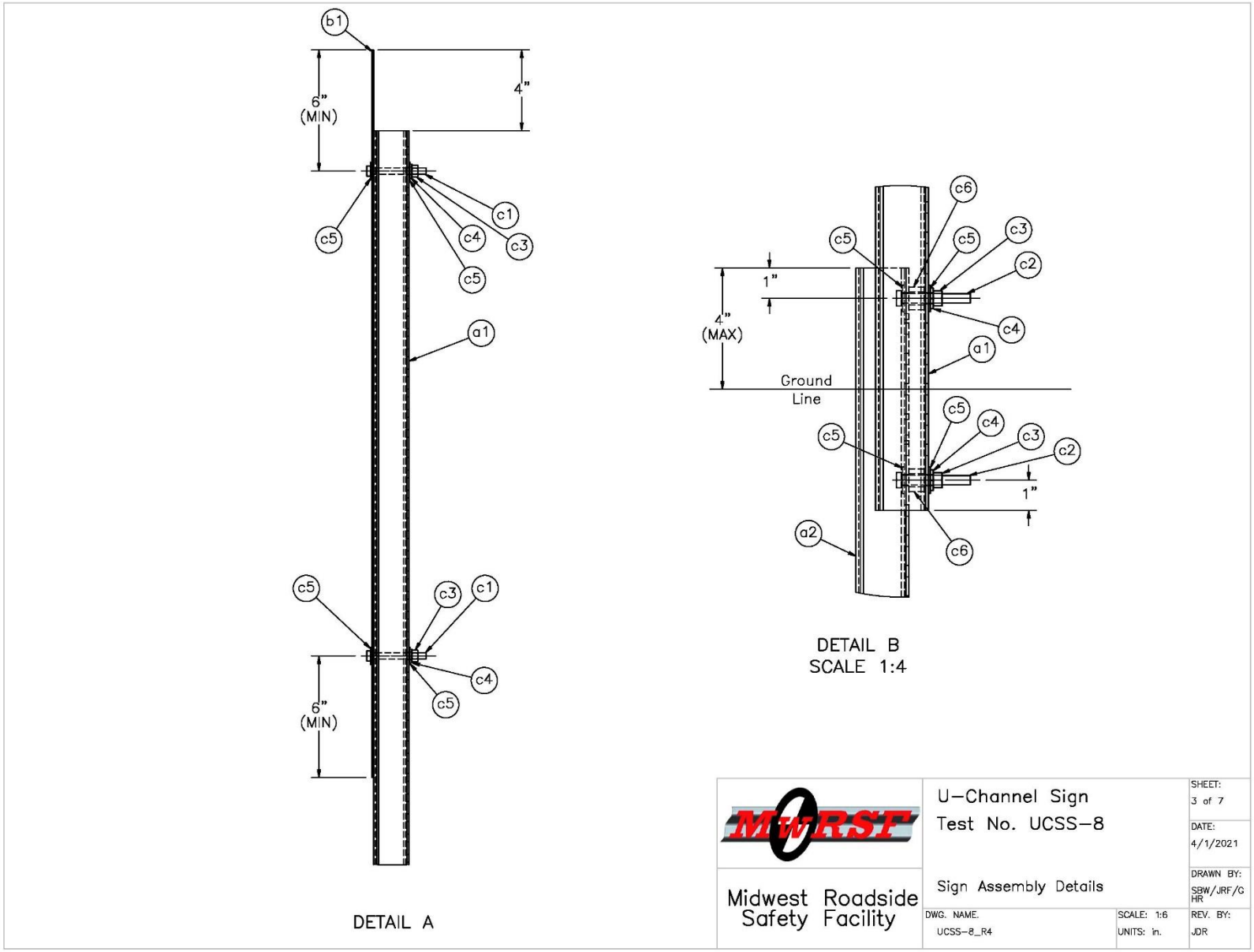

Figure 129. Sign Assembly Details, Test No. UCSS-8

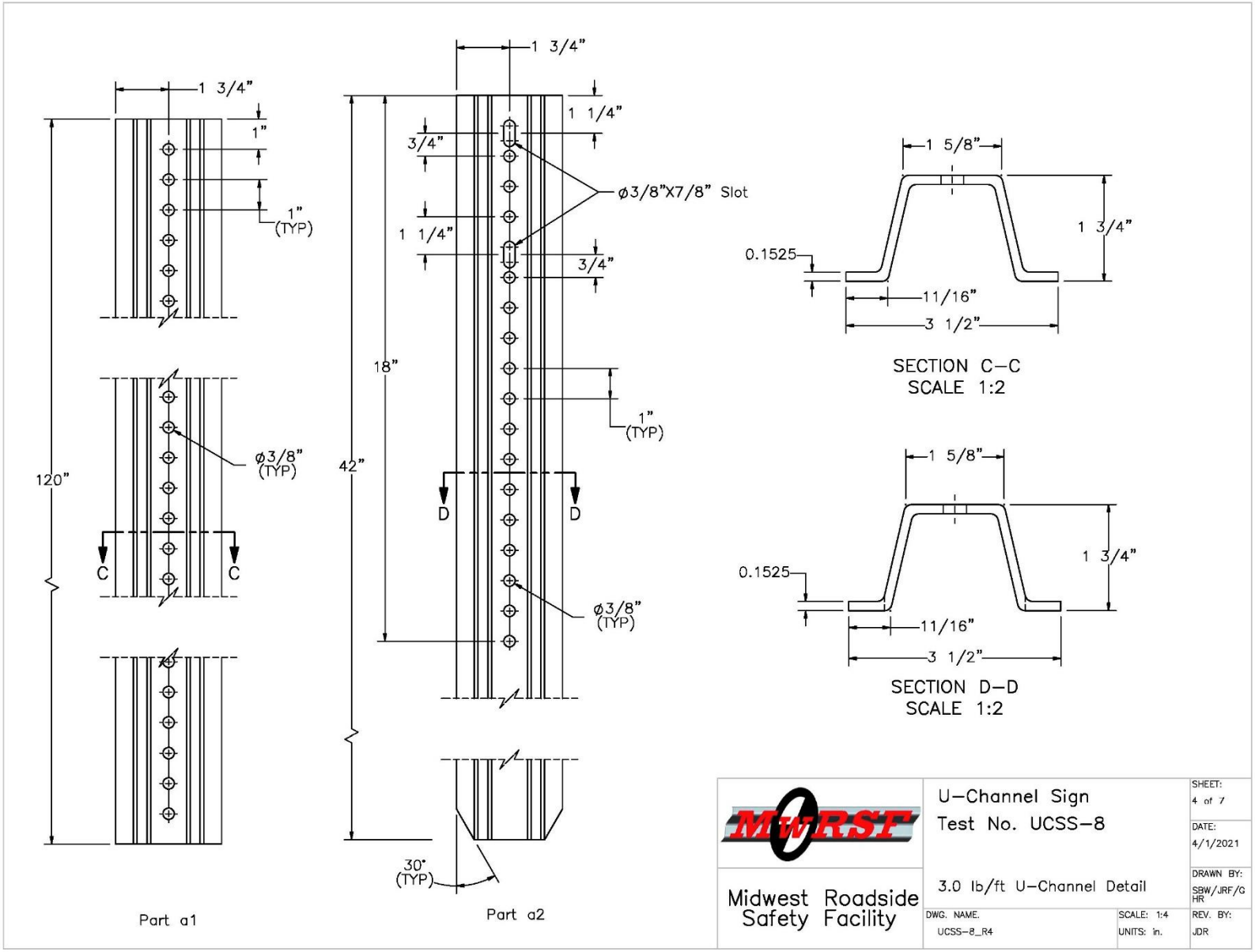

Figure 130. U-Channel Detail, Test No. UCSS-8

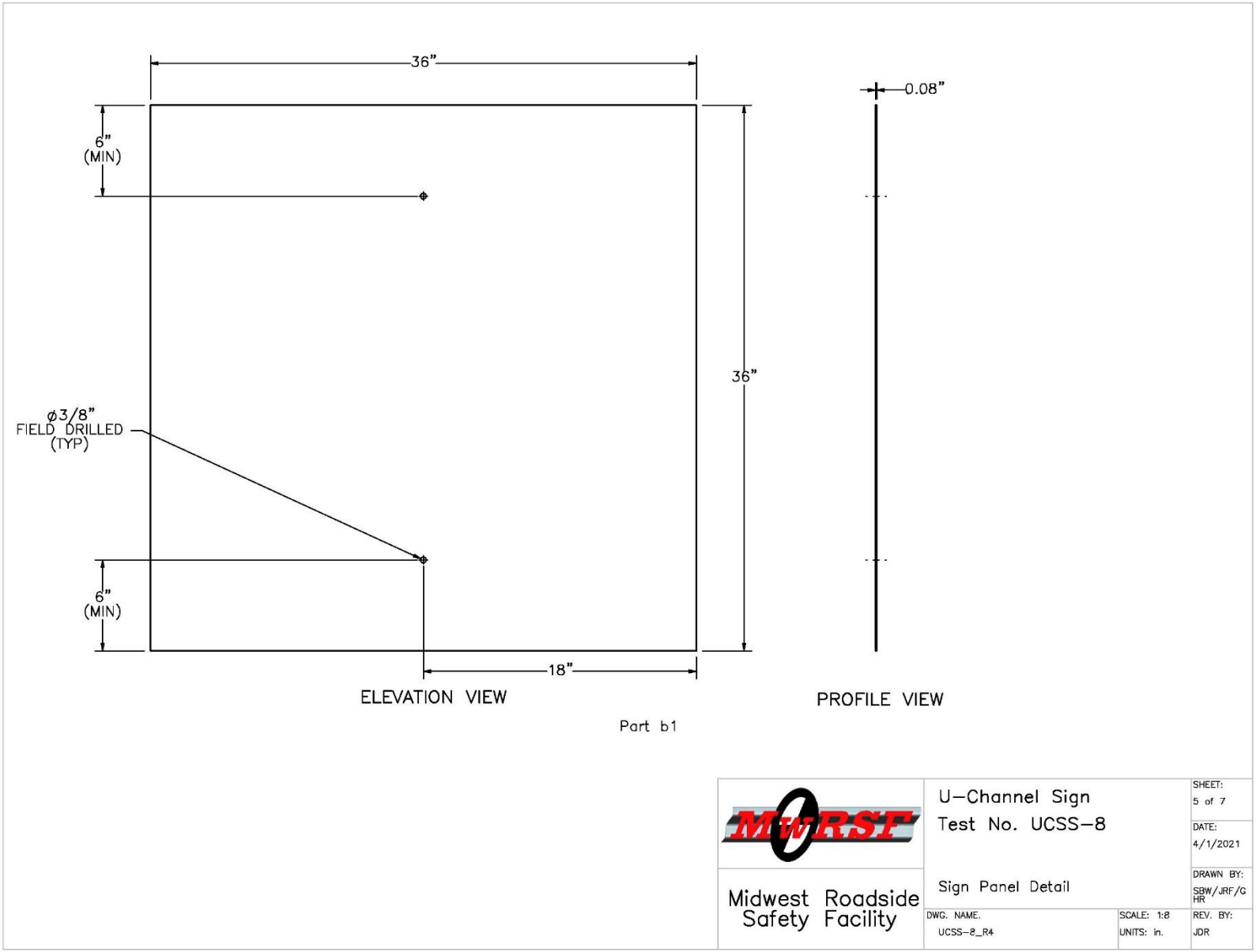

Figure 131. Sign Panel Detail, Test No. UCSS-8

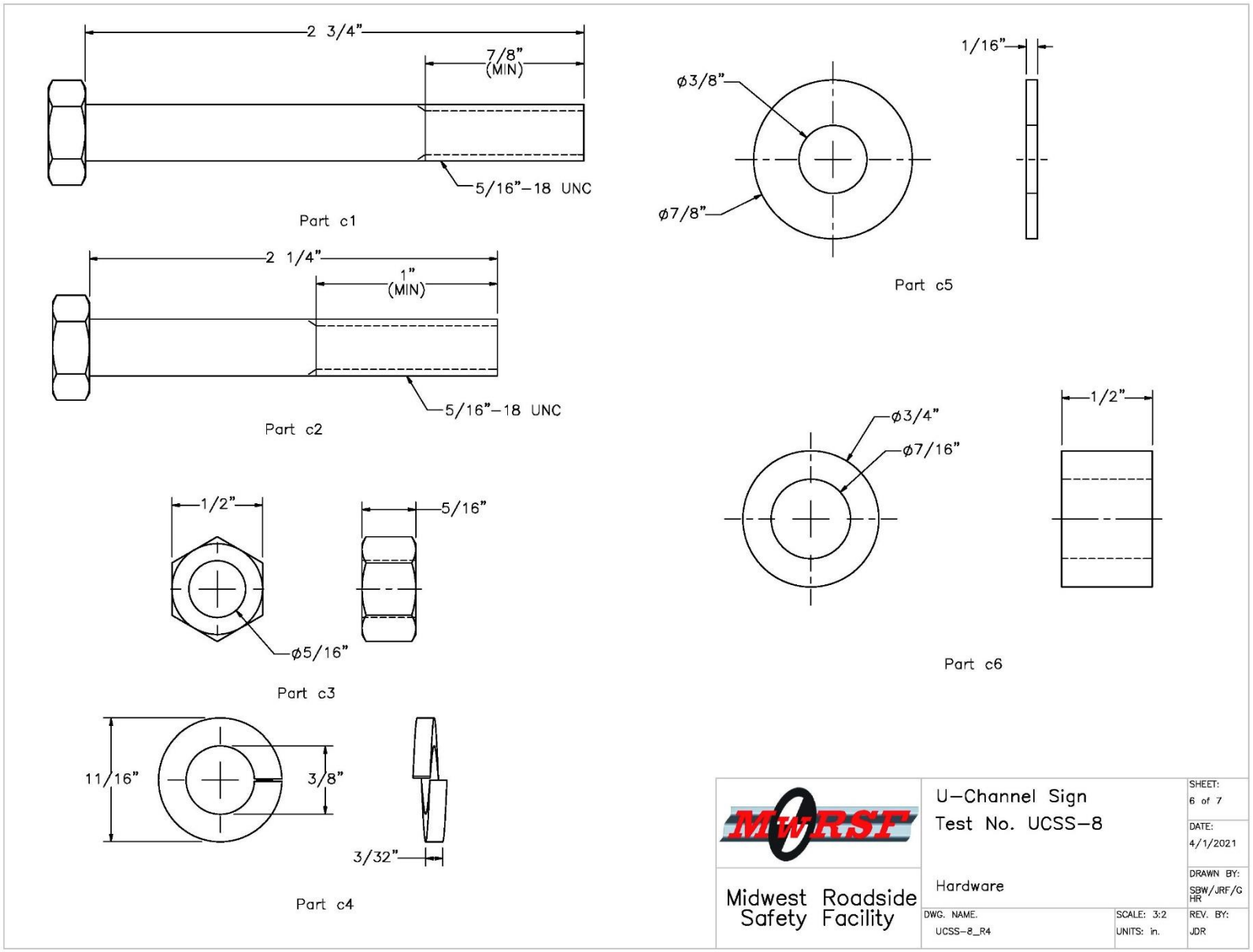

Figure 132. Hardware, Test No. UCSS-8

Item No.	QTY.	Description	Material Specification	Treatment Specification	Hardware Guide
a1	1	3.00 lb/ft U–Channel Sign Post, 120" Long	ASTM A499 Gr. 60 Min. Yield = 60 ksi	ASTM A123	PFP35
a2	1	3.00 lb/ft U–Channel Sign Post, 42" Long	ASTM A499 Gr. 60 Min. Yield = 60 ksi	ASTM A123	PFP35
b1	1	36"x36"x0.08" Sign with Reflective Sheeting	Aluminum Alloy 5052 or Similar	–	–
c1	2	5/16"–18 UNC, 2 3/4" Long Hex Bolt	SAE J429 Gr. 5 or 9	Fe/ZN 3AN per ASTM F1941	FBX08b
c2	2	5/16"–18 UNC, 2 1/4" Long Hex Bolt	SAE J429 Gr. 9	Zinc–Plated	FBX08b
c3	4	5/16"–18 UNC Heavy Hex Nut	SAE J995 Gr. 5 or 9	Fe/Zn 3AN per ASTM F1941	FNX08b
c4	4	3/8" Dia. Lock Washer	Low Carbon Steel	Fe/Zn 3AN per ASTM F1941	–
c5	8	5/16" Dia. Plain Round Washer	Low Carbon Steel	Fe/Zn 3AN per ASTM F1941	FWC08a
c6	2	ø3/4"x1/2" Post Spacer	As Supplied	–	–

* Part c2 may be 2 or 2 1/4 in. in length

MwRSF Midwest Roadside Safety Facility	U–Channel Sign Test No. UCSS–8		SHEET: 7 of 7
			DATE: 4/1/2021
	Bill of Materials		DRAWN BY: SBW/JRF/GHR
	DWG. NAME. UCSS–8_R4	SCALE: None UNITS: in.	REV. BY: JDR

Figure 133. Bill of Materials, Test No. UCSS-8

Figure 134. Sign Installation, Test No. UCSS-8

9.2 Surrogate, Reusable, 1100C Test Vehicle Test No. UCSS-8

9.2.1 Weather Conditions

Test no. UCSS-8 was conducted on November 5, 2020 at approximately 12:00 p.m. The weather conditions as per the National Oceanic and Atmospheric Administration (station 14939/LNK) were reported and are shown in Table 24.

Table 24. Weather Conditions, Test No. UCSS-8

Temperature	72° F
Humidity	38%
Wind Speed	0 mph
Wind Direction	000° from True North
Sky Conditions	Sunny
Visibility	9.9 Statute Miles
Pavement Surface	Dry
Previous 3-Day Precipitation	0.00 in.
Previous 7-Day Precipitation	0.00 in.
Soil Moisture Content	4.14%

9.2.2 Test Description

The 2,408-lb surrogate, reusable, 1100C test vehicle impacted the single, U-channel sign support installation at a speed of 63.1 mph and at an angle of 0 degrees. Impact occurred at the centerline of the surrogate vehicle's front bumper, as shown in Figure 135. The surrogate vehicle came to rest downstream from the installation after brakes were applied. A detailed description of the sequential impact events is contained in Table 25. Sequential photographs are shown in Figure 136. Documentary photographs of the crash test are shown in Figures 137 and 138.

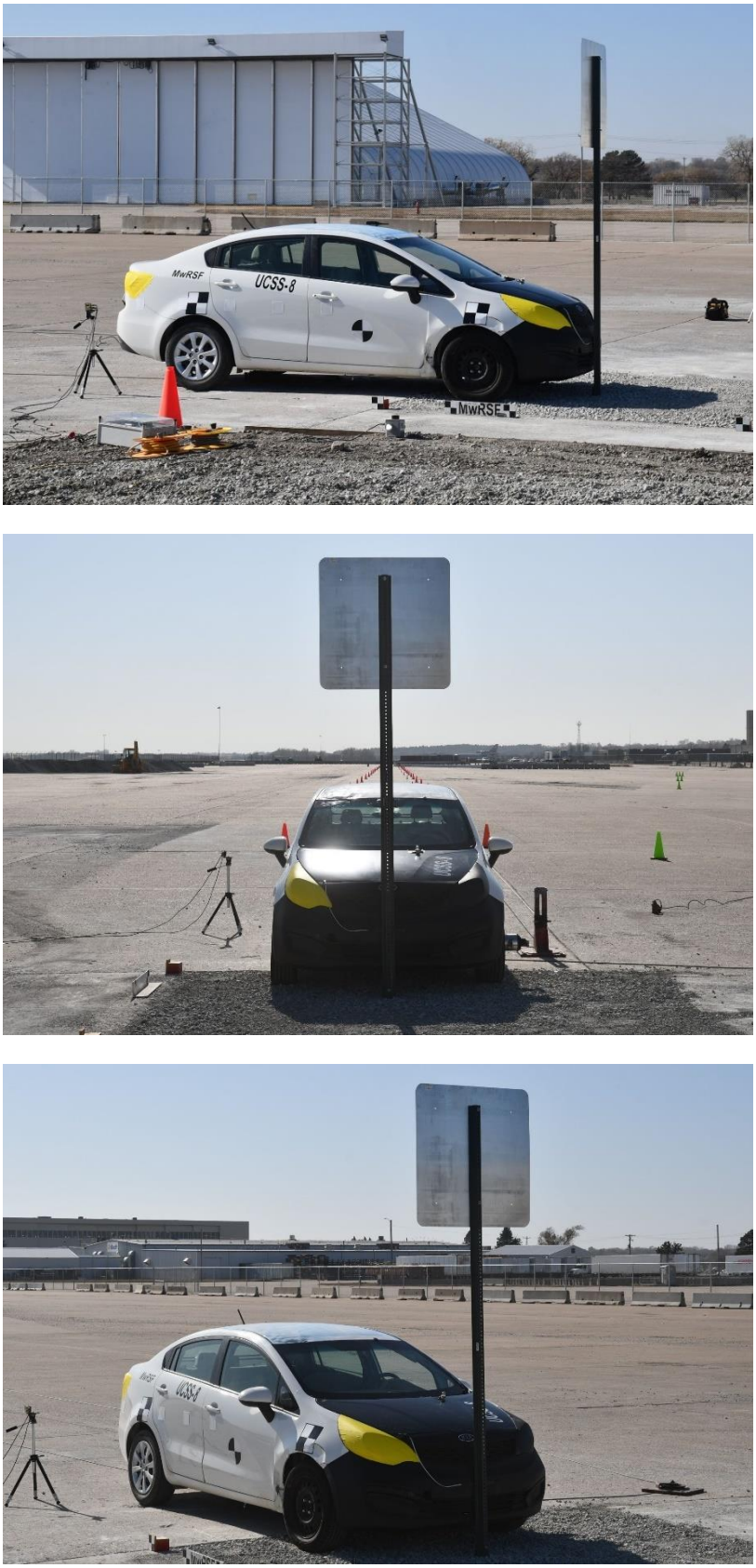

Figure 135. Impact Location, Test No. UCSS-8

Table 25. Sequential Description of Impact Events, Test No. UCSS-8

TIME (sec)	EVENT
0.000	Vehicle's front bumper contacted bottom of sign support at 63.1 mph and 0 degrees.
0.005	Sign support fractured at bumper height.
0.023	Disengaged sign and post lost contact with front bumper.
0.120	Top of sign panel contacted vehicle antenna and rear of roof.
0.135	Rear window shattered.
0.159	Vehicle cleared sign support stub traveling at 60.5 mph.
0.206	Sign panel lost contact with vehicle.

0.000 sec

0.050 sec

0.100 sec

0.150 sec

0.200 sec

0.250 sec

0.000 sec

0.050 sec

0.100

0.150 sec

0.200 sec

0.250 sec

Figure 136. Additional Sequential Photographs, Test No. UCSS-8

Figure 137. Documentary Photographs, Test No. UCSS-8

Figure 138. Additional Documentary Photographs, Test No. UCSS-8

9.2.3 Sign Panel and U-Channel Support Damage

System damage is shown in Figure 139. The system was impacted 23¾ in. above the ground. The U-channel sign support fractured approximately 65 in. from the bottom of the sign panel. The bottom 23-in. length of the upper sign support was fully disengaged from the sign support stub with the upper and lower stub bolts disengaged. The sign panel exhibited minor deformation and scraping on the front face. The sign support stub was undamaged and extended approximately 4 in. above the ground line.

9.2.4 Surrogate, Reusable, 1100C Test Vehicle Damage

The surrogate, reusable, 1100C test vehicle sustained minor damage, as shown in Figure 140. Damage consisted of minor deformation and contact marks at the centerline of the front bumper where impact with the sign support had occurred. The back of the roof was deformed, and the rear window was shattered due to the secondary sign impact. Following test no. UCSS-8, the rear window on the surrogate, reusable, 1100C test vehicle was replaced, and the roof was repaired for the subsequent test.

Per guidance issued by AASHTO in May 2018 [14], rear window shattering is considered unacceptable if the test article makes direct contact with the window and if there is any identifiable penetration of the test article into the occupant compartment. Although there is currently no research to indicate if this test outcome is correlated with serious injuries, the roadside safety community has defaulted to a conservative position until further research can be conducted on the correlation of rear window shattering and occupant injury. Rear window shattering when bridged by a structural member or by damage to the roof or “C”-pillar are still considered acceptable. During test no. UCSS-8, the rear window was shattered due to test article direct contact, as shown in Figure 141, and therefore the outcome is determined to be unacceptable according to MASH 2016.

Figure 139. Sign Installation Damage, Test No. UCSS-8

Figure 140. Vehicle Damage, Test No. UCSS-8

Figure 141. Test Article Direct Contact with Rear Window, Test No. UCSS-8

During the test, the sign support fractured above the lap splice. The lower fractured portion of the sign support rotated down and contacted the ground and the surrogate, reusable, 1100C test vehicle's undercarriage. Although no spearing, protrusion, or excessive floorpan deformation occurred, a potential existed for the test article to contact or penetrate the occupant compartment floorpan due to the test article fracture. This sign support behavior is shown in Figure 142.

Figure 142. Fractured and Overriden Portion of Post During Test No. UCSS-8

9.2.5 Occupant Risk

The calculated OIVs and ORAs in both the longitudinal and lateral directions are shown in Table 26. It is important to note that in the test, the impulse on the vehicle was relatively small and of short duration. Thus, *x* and *y* in the flail-space model were less than 2 ft and 1 ft, respectively, during the period when the vehicle was in contact with the system. As specified in Section A5.5.2 of MASH 2016, in such cases, it was recommended that the OIV be set equal to the vehicle's change in velocity that occurred during contact with the test article, or parts thereof [1]. If parts of the test article remain with the vehicle after impact, the vehicle's change in velocity should be computed at the time the vehicle clears the footing or foundation of the test article. For test no. UCSS-8, the OIV, or in this case, the vehicle change in velocity, was reported when the vehicle lost contact with the test article. Note that the OIVs and ORAs were within suggested limits, as provided in MASH 2016. The calculated THIV, PHD, and ASI values are also shown in Table 26.

Table 26. Summary of OIV, ORA, THIV, PHD, and ASI Values, Test No. UCSS-8

Evaluation Criteria		Transducer		MASH 2016 Limits
		SLICE-1 (primary)	SLICE-2	
OIV ft/s	Longitudinal	-3.74	-3.64	±16
	Lateral	-0.46	-0.59	±16
ORA g's	Longitudinal	N/A	N/A	±20.49
	Lateral	N/A	N/A	±20.49
Maximum Angular Displacement deg.	Roll	1.0	1.0	±75
	Pitch	3.3	3.4	±75
	Yaw	-0.7	-0.5	not required
THIV ft/s		0.00	0.00	not required
PHD g's		4.89	4.91	not required
ASI		0.35	0.35	not required

Note: The vehicle cleared the test article foundation at 0.159 sec after impact for test no. UCSS-8, which was used to determine vehicle change in velocity, denoted as OIV.

N/A = Not Applicable

9.2.6 Discussion

The analysis of the test results for test no. UCSS-8 showed that the system readily activated in a predictable manner when impacted by the surrogate, reusable, 1100C test vehicle. A summary of the test results and sequential photographs are shown in Figure 143. Detached elements, fragments, or other debris from the test article penetrated the occupant compartment, but it did not present an undue hazard to other traffic, pedestrians, or work-zone personnel. Deformations of, or intrusions into, the occupant compartment that could have caused serious injury did occur, as the sign panel shattered and penetrated the rear window of the vehicle. Vehicle roll, pitch, and yaw angular displacements were deemed acceptable, because they did not adversely influence occupant risk nor cause rollover. Therefore, test no. UCSS-8, when impacted by the surrogate, reusable, 1100C test vehicle, was anticipated to be unacceptable according to the MASH 2016 safety performance criteria for test designation no. 3-61.

0.000 sec 0.050 sec 0.100 sec 0.150 sec 0.200 sec

- Test Agency ..... MwRSF
- Test Number UCSS-8
- Date 11/5/2020
- Representative MASH 2016 Test Designation No. 3-61
- Test Article ..... 7-ft tall, 3 lb/ft U-channel marker sign
- Key Component – Aluminum Sign Panel
  - Dimensions ..... 36 in. x 36 in. x 0.08 in.
  - Mounting Height (Bottom of Sign) ..... 7 ft
- Key Component – U-Channel Sign Support
  - Length (Upper Support) ..... 120 in.
  - Length (Lower Stub) ..... 42 in.
  - Embedment ..... 38 in.
- Soil Type ..... Coarse, crushed limestone (well-graded gravel)
- Vehicle Make /Model ..... Surrogate, Reusable, 1100C Test Vehicle
  - Curb ..... 2,480 lb
  - Test Inertial ..... 2,408 lb
  - Gross Static ..... 2,421 lb
- Impact Conditions
  - Speed ..... 63.1 mph
  - Angle ..... 0 deg.
  - Impact Location ..... Vehicle Centerline
- Kinetic Energy ..... 320.8 kip-ft > 288 kip-ft Limit from MASH 2016
- Exit Conditions
  - Speed ..... 60.5 mph
  - Angle ..... 0 deg.
- Vehicle Stability ..... Satisfactory
- Vehicle Stopping Distance ..... N/A
- Vehicle Damage ..... Minor
  - Parts in Need of Replacement ..... Rear Window, Roof (Repaired)
  - Maximum Interior Deformation ..... N/A

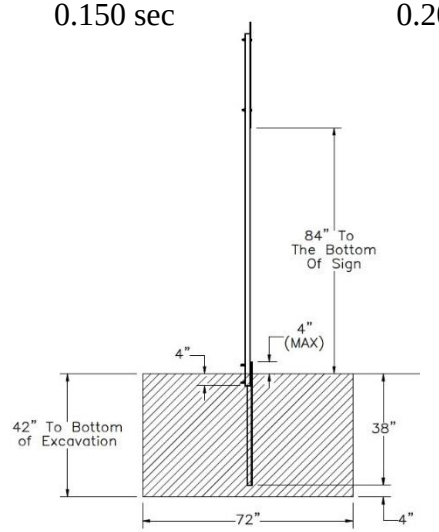

- Transducer Data

Evaluation Criteria		Transducer		MASH 2016 Limit
		SLICE-1 (primary)	SLICE-2	
OIV ft/s	Longitudinal	-3.74	-3.64	±16
	Lateral	-0.46	-0.59	±16
ORA g's	Longitudinal	N/A	N/A	N/A
	Lateral	N/A	N/A	N/A
Maximum Angular Displacement deg.	Roll	1.0	1.0	±75
	Pitch	3.3	3.4	±75
	Yaw	-0.7	-0.5	not required

Figure 143. Summary of Representative MASH Test Results and Sequential Photographs, Test No. UCSS-8

10 DIRECT EMBEDMENT 4-FT TALL 1.12-LB/FT U-CHANNEL DELINEATOR

10.1 Test No. UCSS-9 Design Details

The test installation for test no. UCSS-9 consisted of a single, U-channel sign support, as shown in Figures 144 through 149. Photographs of the test installation are shown in Figure 150. Material specifications, mill certifications, and certificates of conformity for the system materials are shown in Appendix I.

The sign support was constructed with 1.12-lb/ft ASTM A499 Grade 60 U-channel, which supported a 3-in. x 6-in. x 0.08-in. aluminum reflective delineator. The delineator was installed at a height of 4 ft, as measured from the bottom of the sign panel to the ground line. The sign support for test no. UCSS-9 was comprised of a single, 78-in. long, U-channel sign support that was directly embedded into coarse, crushed limestone (well-graded gravel) at a depth of 24 in.

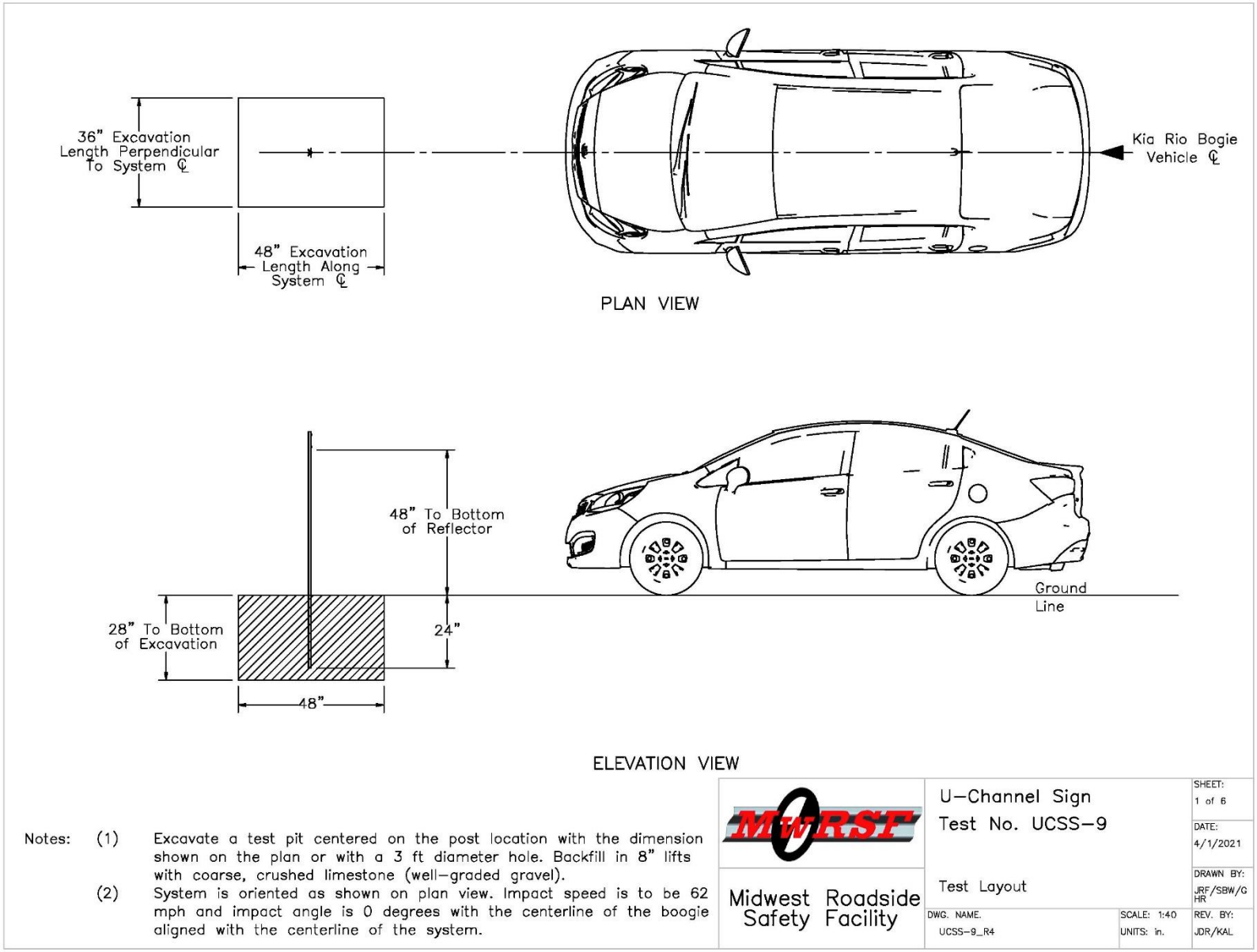

Figure 144. Test Installation Layout, Test No. UCSS-9

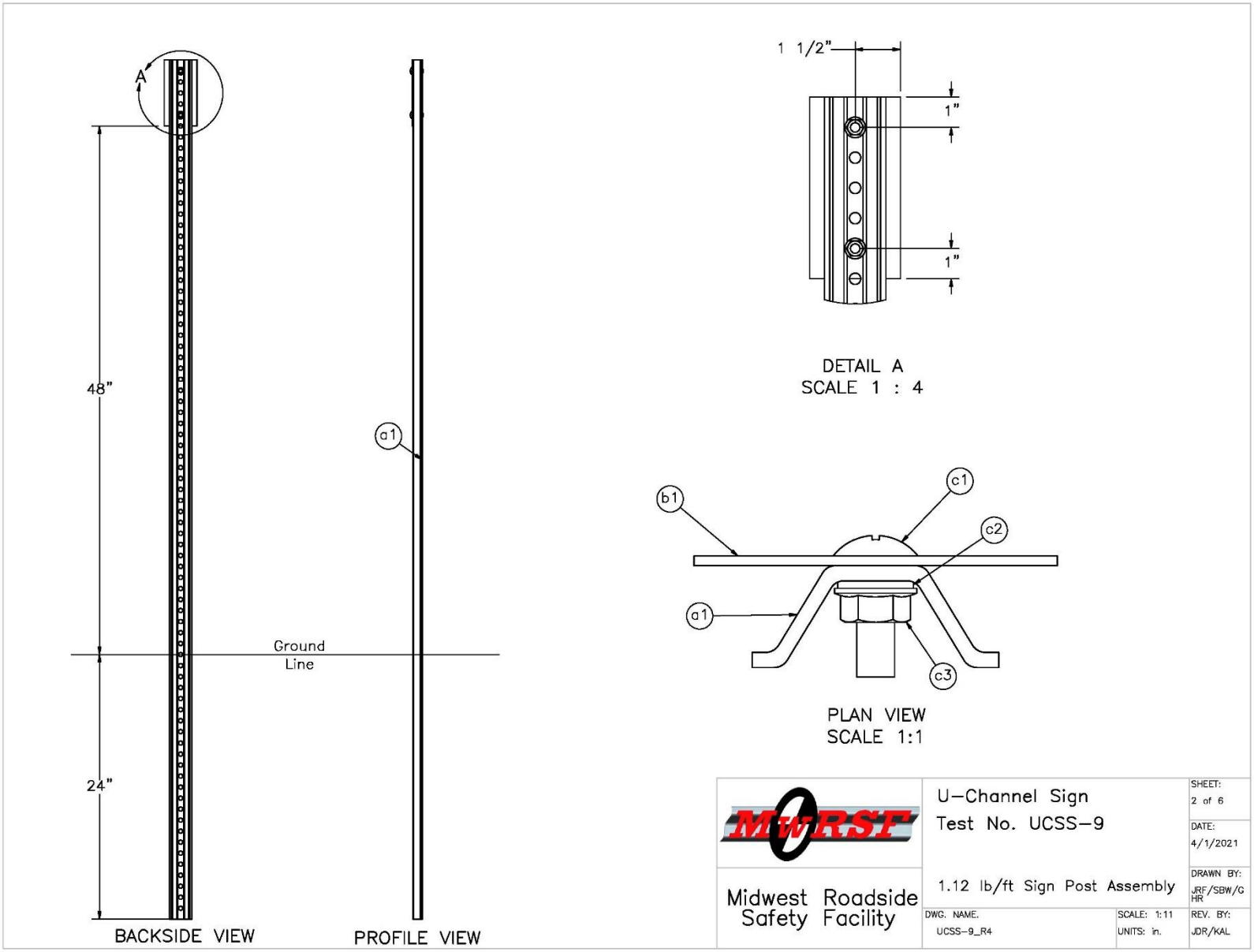

Figure 145. Sign Post Assembly, Test No. UCSS-9

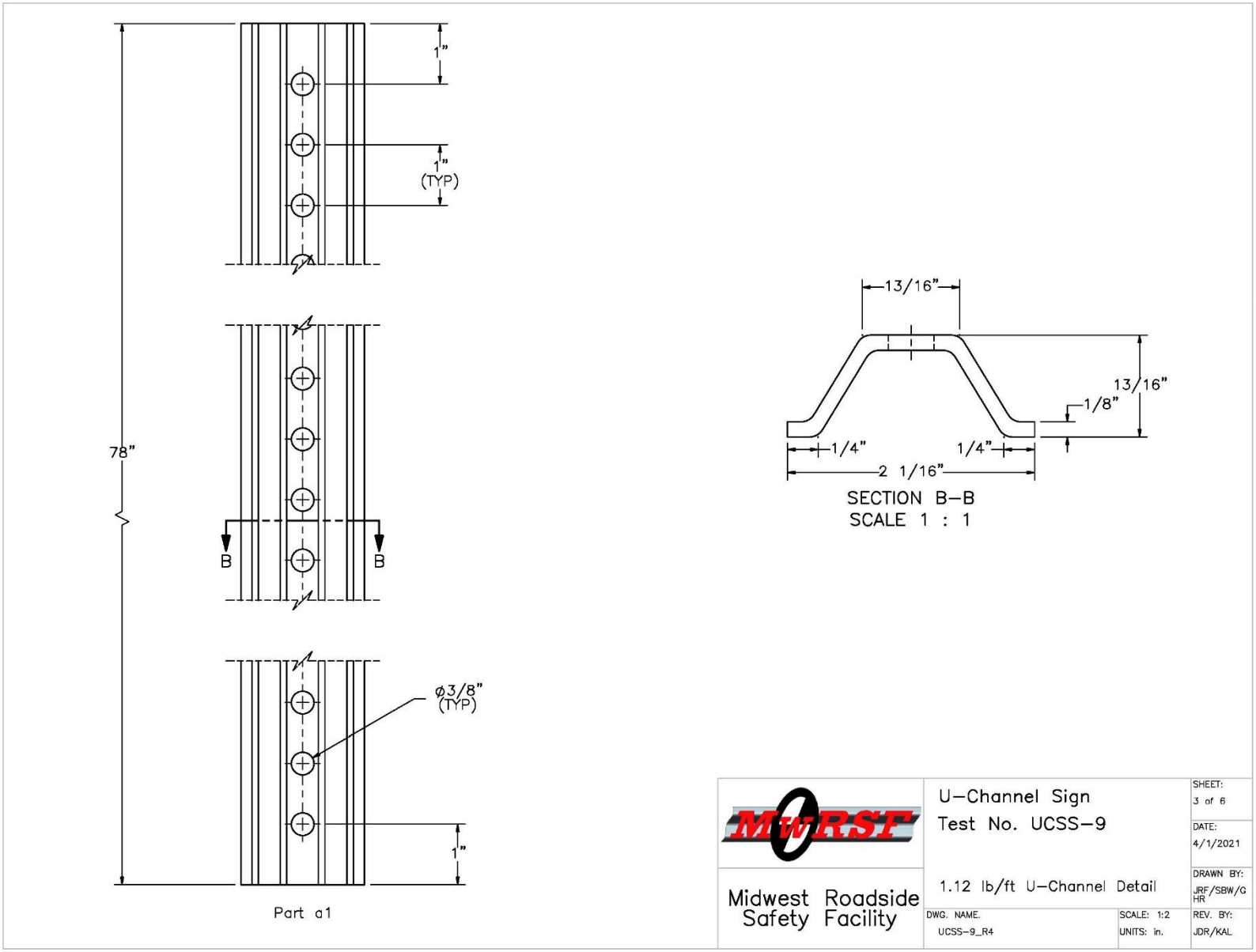

Figure 146. U-Channel Detail, Test No. UCSS-9

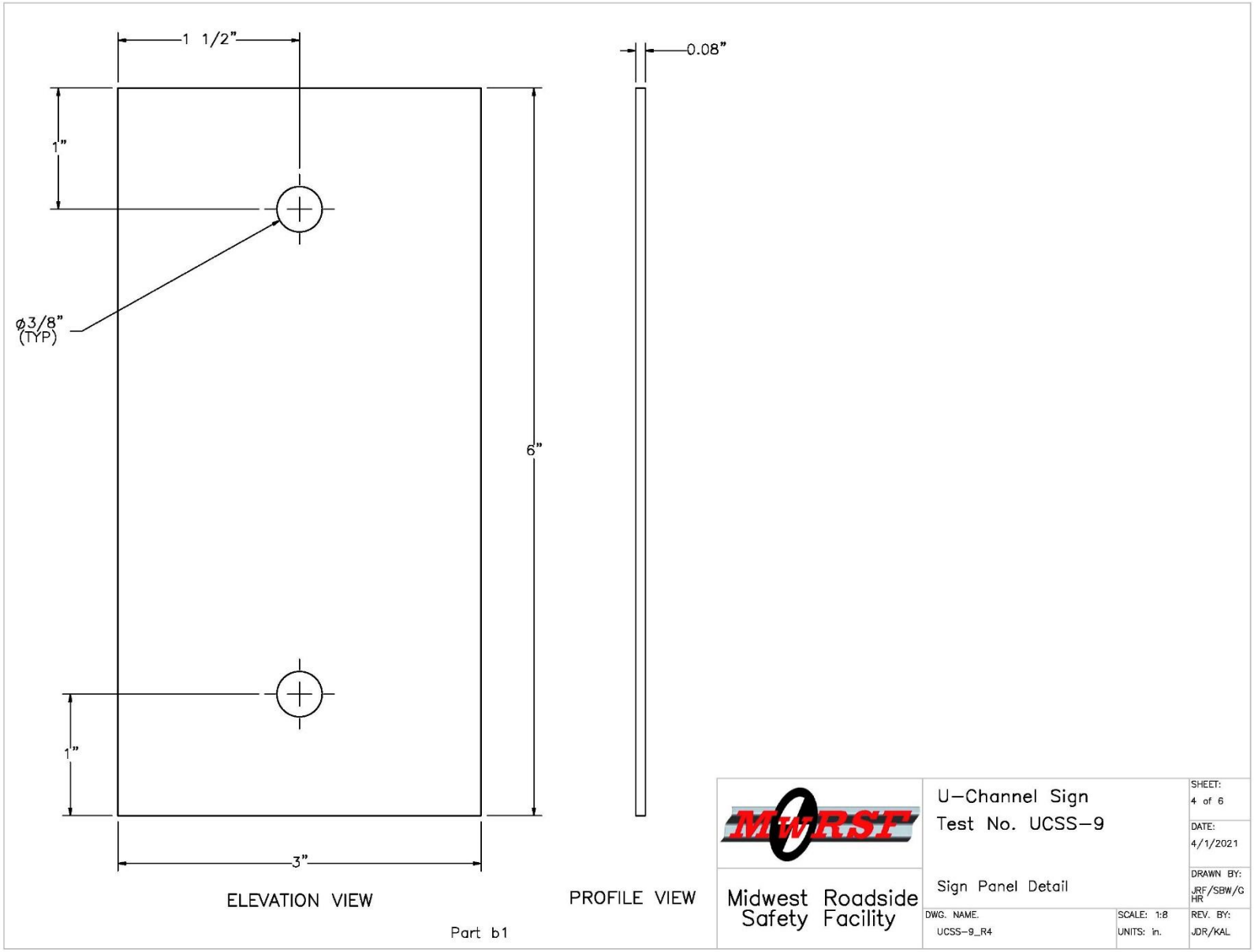

Figure 147. Sign Panel Detail, Test No. UCSS-9

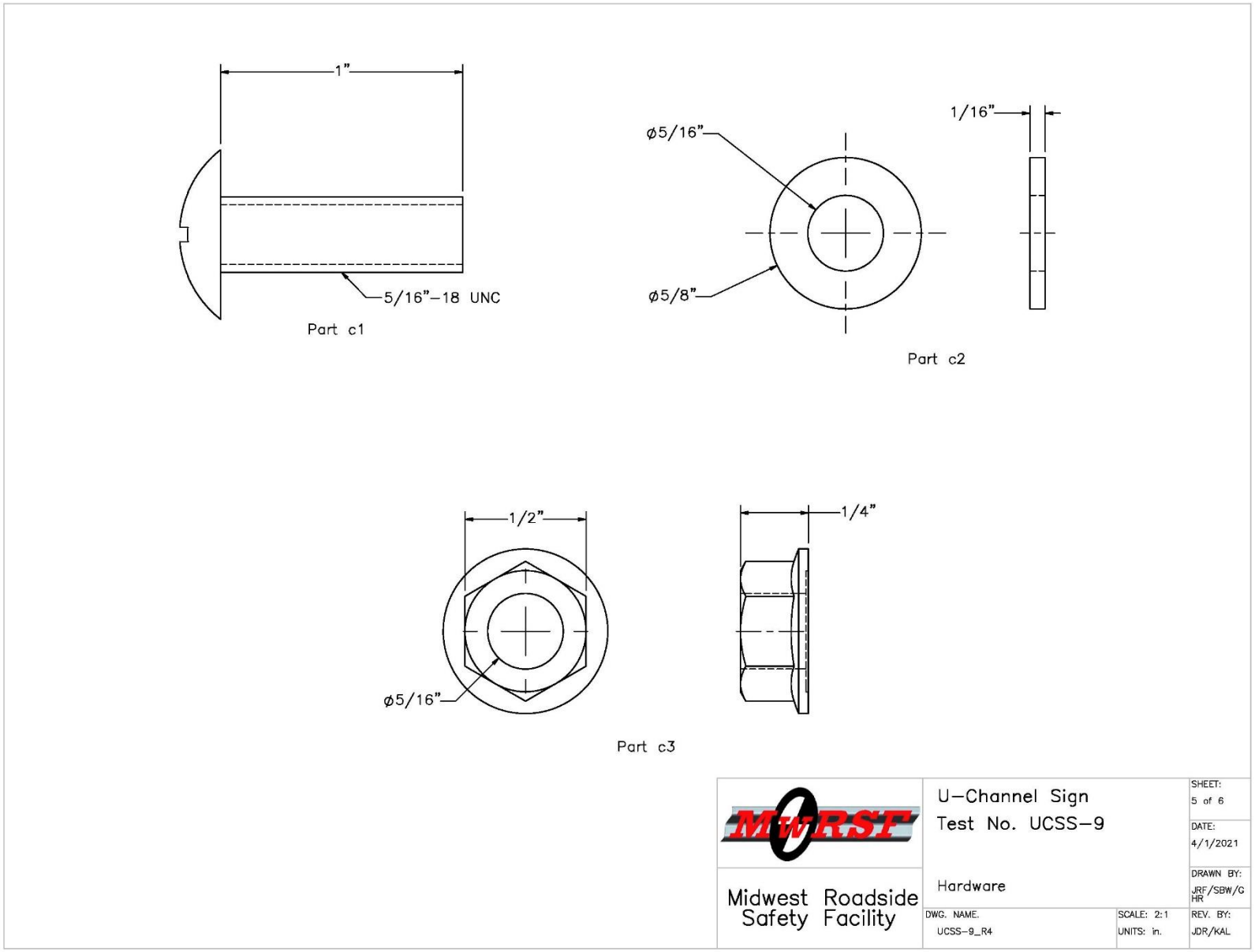

Figure 148. Hardware, Test No. UCSS-9

Item No.	QTY.	Description	Material Specification	Treatment Specification	Hardware Guide
a1	1	1.12 lb/ft U–Channel Sign Post, 78" Long	ASTM A499 Gr. 60 Min. Yield = 80 ksi	ASTM A123	–
b1	1	3"x6"x0.08" Reflective Delineator	Aluminum Alloy 5052	–	–
c1	2	5/16"–18 UNC, 1" long machine screw	Stainless Steel	–	–
c2	2	5/16" Dia. Plain Round Washer	Low Carbon Steel	Fe/Zn 3AN per ASTM F1941	FWC08a
c3	2	5/16"–18 UNC, Lock Nut	Stainless Steel	–	–

MwRSF Midwest Roadside Safety Facility	U–Channel Sign Test No. UCSS–9 Bill of Materials		SHEET: 6 of 6 DATE: 4/1/2021 DRAWN BY: JRF/SBW/GHR
	DWG. NAME. UCSS–9_R4	SCALE: None UNITS: in.	REV. BY: JDR/KAL

Figure 149. Bill of Materials, Test No. UCSS-9

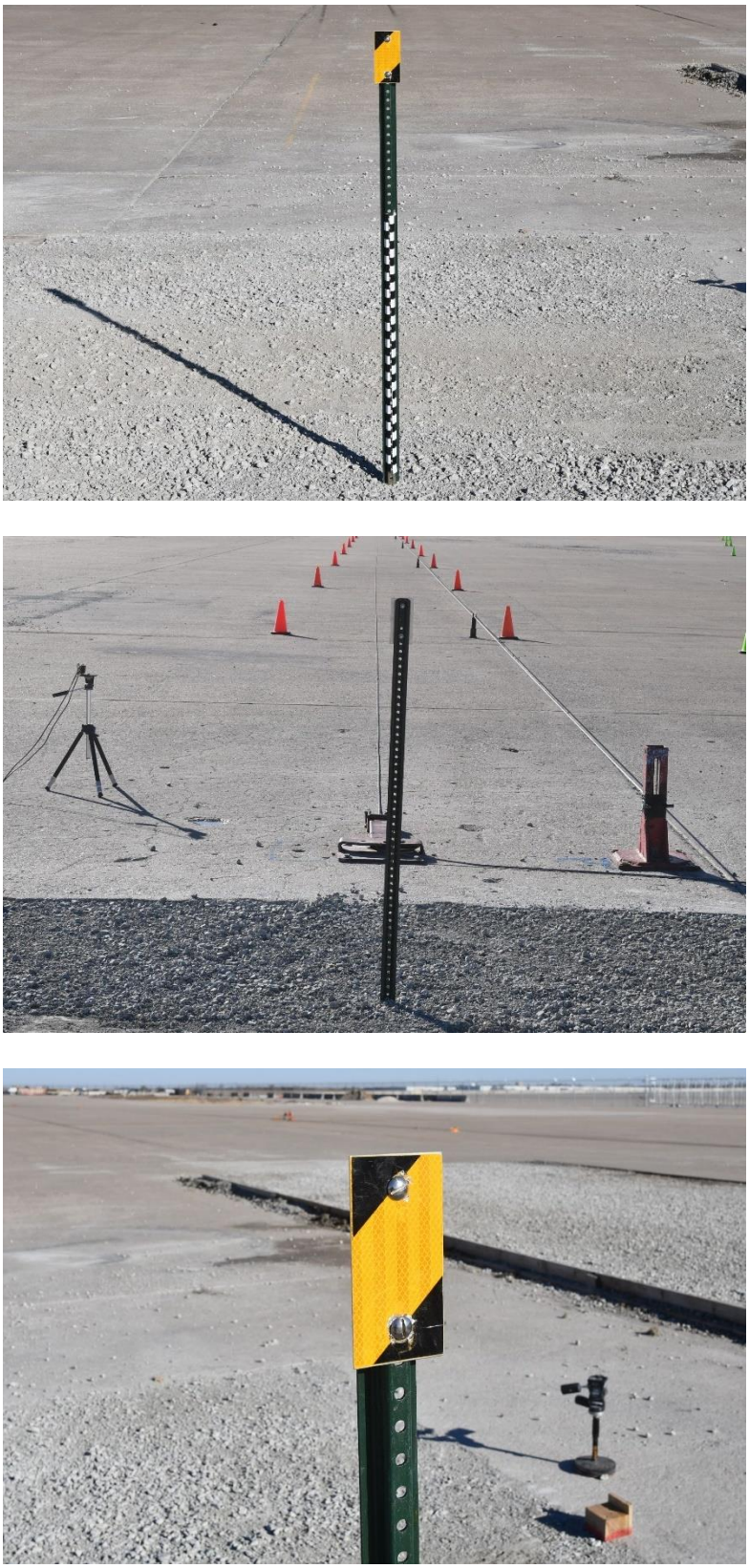

Figure 150. Sign Installation, Test No. UCSS-9

10.2 Surrogate, Reusable, 1100C Test Vehicle Test No. UCSS-9

10.2.1 Weather Conditions

Test no. UCSS-9 was conducted on November 17, 2020 at approximately 12:00 p.m. The weather conditions as per the National Oceanic and Atmospheric Administration (station 14939/LNK) were reported and are shown in Table 27.

Table 27. Weather Conditions, Test No. UCSS-9

Temperature	53° F
Humidity	41%
Wind Speed	14 mph
Wind Direction	140° from True North
Sky Conditions	Sunny
Visibility	9.9 Statute Miles
Pavement Surface	Dry
Previous 3-Day Precipitation	0.04 in.
Previous 7-Day Precipitation	0.63 in.
Soil Moisture Content	3.20%

10.2.2 Test Description

The 2,408-lb surrogate, reusable, 1100C test vehicle impacted the single, U-channel sign support with reflective delineator at a speed of 63.8 mph and at an angle of 0 degrees. Impact occurred at the centerline of the surrogate vehicle's front bumper, as shown in Figure 151. The surrogate vehicle came to rest downstream from the installation after brakes were applied. A detailed description of the sequential impact events is contained in Table 28. Sequential photographs are shown in Figure 152. Documentary photographs of the crash test are shown in Figures 153 and 154.

Figure 151. Impact Location, Test No. UCSS-9

Table 28. Sequential Description of Impact Events, Test No. UCSS-9

TIME (sec)	EVENT
0.000	Vehicle's front bumper contacted bottom of sign support at 63.8 mph and 0 degrees.
0.008	Sign support deformed around front bumper and fractured near ground line.
0.021	Sign support rotated toward ground in front of vehicle.
0.087	Sign support lost contact with vehicle's front bumper.
0.154	Vehicle cleared sign support stub traveling at 63.2 mph.

0.000 sec

0.050 sec

0.100 sec

0.150 sec

0.200 sec

0.250 sec

0.000 sec

0.050 sec

0.100 sec

0.150 sec

0.200 sec

0.250 sec

Figure 152. Additional Sequential Photographs, Test No. UCSS-9

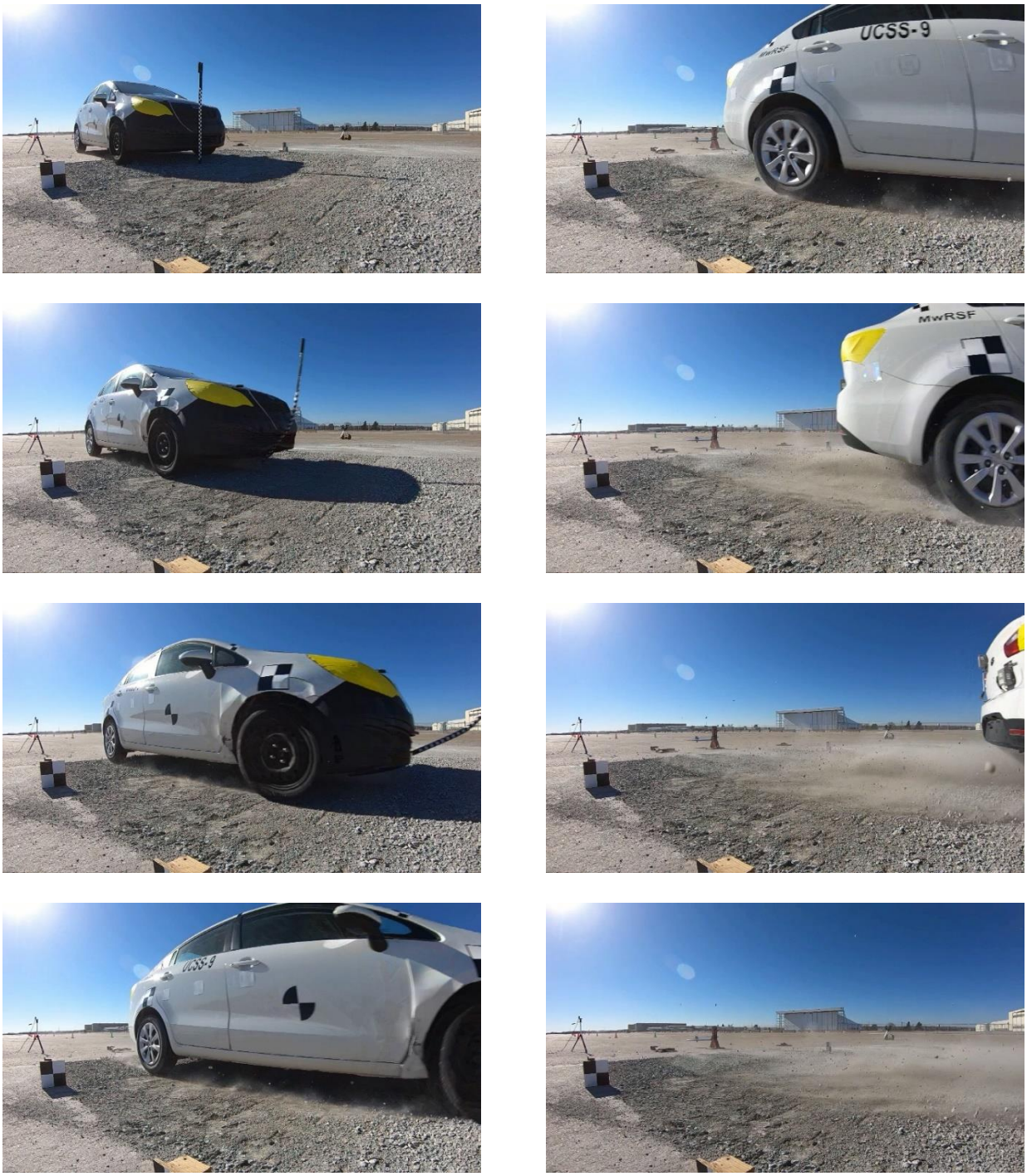

Figure 153. Documentary Photographs, Test No. UCSS-9

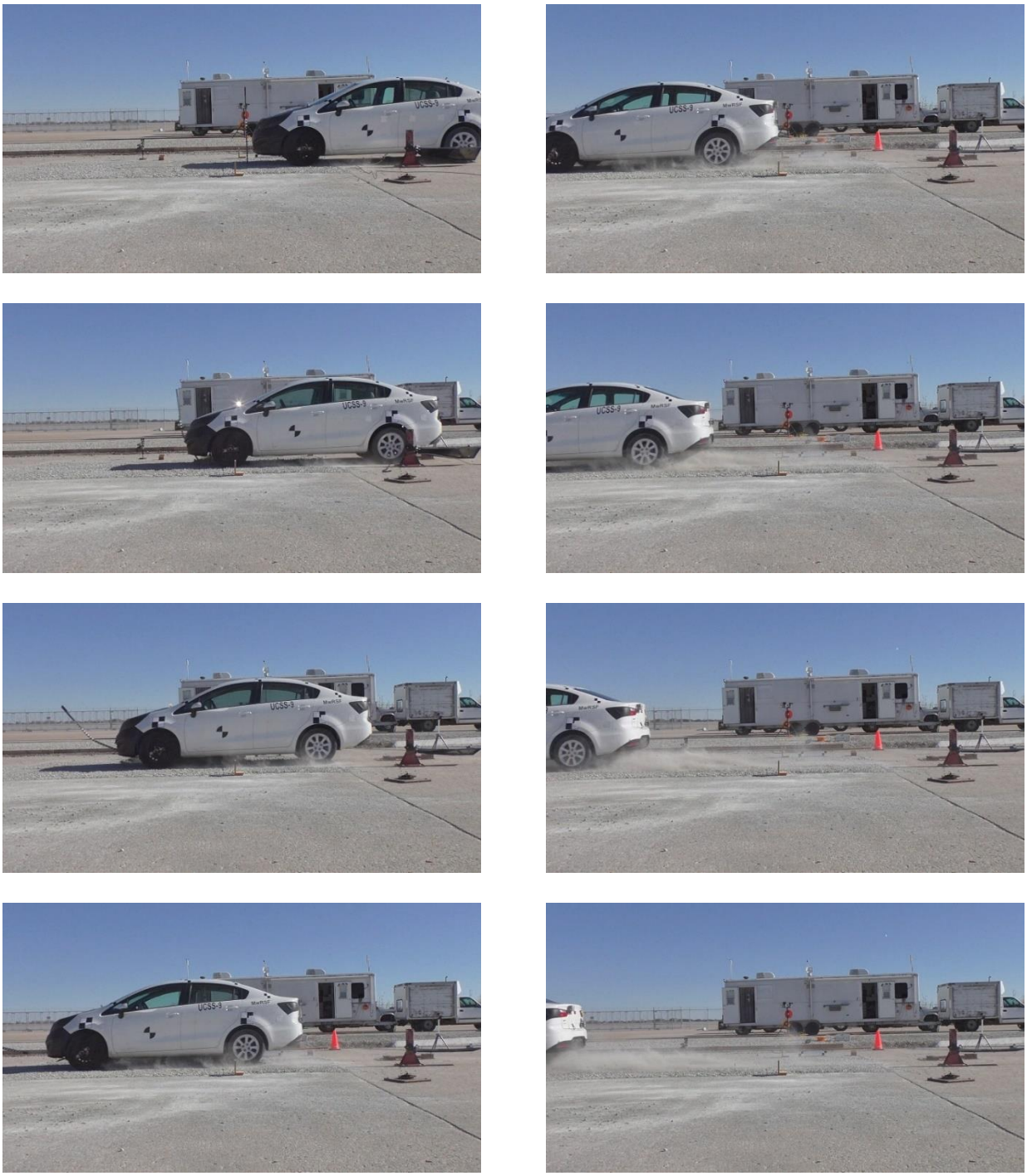

Figure 154. Additional Documentary Photographs, Test No. UCSS-9

10.2.3 Sign Panel and U-Channel Support Damage

System damage is shown in Figure 155. The system was impacted 23¾ in. above the ground. The U-channel sign support fractured approximately 49 in. from the bottom of the sign panel or 1 in. below the ground line. The lower fractured section of the U-channel post remained embedded in the soil and did not extend above the ground line. The upper U-channel sign support was deformed approximately 27 in. from the bottom of the reflective delineator, and the reflective delineator exhibited minor deformation along its top edge.

10.2.4 Surrogate, Reusable, 1100C Test Vehicle Damage

The surrogate, reusable, 1100C test vehicle sustained minimal damage, as shown in Figure 156. Damage consisted of contact marks at the centerline of the front bumper where impact had occurred. Excessive occupant compartment deformation did not occur, and the limits established in MASH 2016 for the various areas of the occupant compartment were not violated. Following test no. UCSS-9, the surrogate, reusable, 1100C test vehicle did not require repairs for the subsequent test.

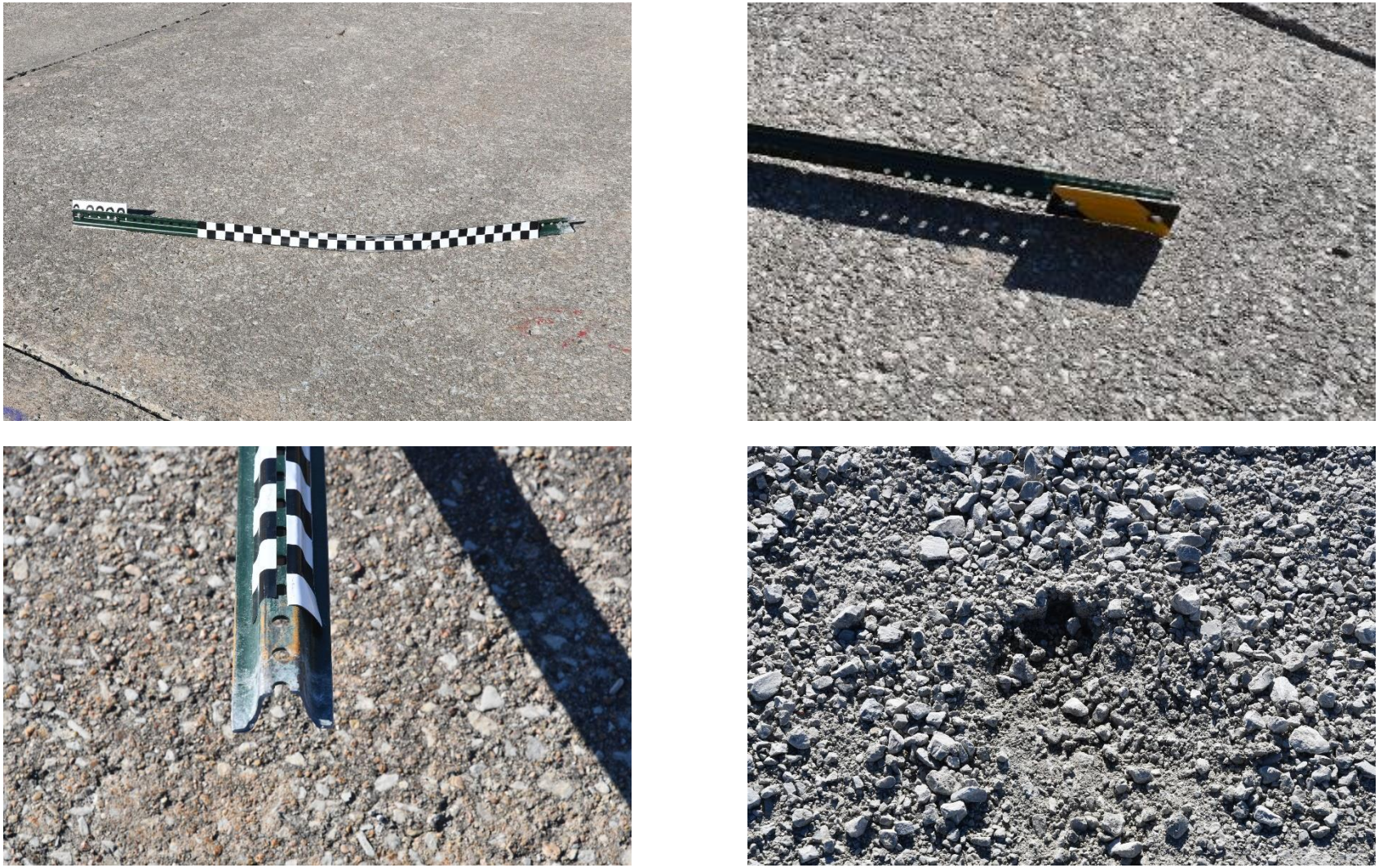

Figure 155. Sign Installation Damage, Test No. UCSS-9

Figure 156. Vehicle Damage, Test No. UCSS-9

10.2.5 Occupant Risk

The calculated OIVs and ORAs in both the longitudinal and lateral directions are shown in Table 29. It is important to note that in the test, the impulse on the vehicle was relatively small and of short duration. Thus, *x* and *y* in the flail-space model were less than 2 ft and 1 ft, respectively, during the period when the vehicle was in contact with the system. As specified in Section A5.5.2 of MASH 2016, in such cases, it was recommended that the OIV be set equal to the vehicle's change in velocity that occurred during contact with the test article, or parts thereof [1]. If parts of the test article remain with the vehicle after impact, the vehicle's change in velocity should be computed at the time the vehicle clears the footing or foundation of the test article. For test no. UCSS-9, the OIV, or in this case, the vehicle change in velocity, was reported when the vehicle lost contact with the test article. Note that the OIVs and ORAs were within suggested limits, as provided in MASH 2016. The calculated THIV, PHD, and ASI values are also shown in Table 29.

Table 29. Summary of OIV, ORA, THIV, PHD, and ASI Values, Test No. UCSS-9

Evaluation Criteria		Transducer		MASH 2016 Limits
		SLICE-1 (primary)	SLICE-2	
OIV ft/s	Longitudinal	-1.03	-1.00	±16
	Lateral	0.05	-0.15	±16
ORA g's	Longitudinal	N/A	N/A	±20.49
	Lateral	N/A	N/A	±20.49
Maximum Angular Displacement deg.	Roll	0.8	1.0	±75
	Pitch	-0.3	0.5	±75
	Yaw	-0.1	0.1	not required
THIV ft/s		0.00	0.00	not required
PHD g's		1.42	1.31	not required
ASI		0.03	0.04	not required

Note: The vehicle cleared the test article foundation at 0.154 sec after impact for test no. UCSS-9, which was used to determine vehicle change in velocity, denoted as OIV.

N/A = Not Applicable

10.2.6 Discussion

The analysis of the test results for test no. UCSS-9 showed that the system readily activated in a predictable manner when impacted by the surrogate, reusable, 1100C test vehicle. A summary of the test results and sequential photographs are shown in Figure 157. Detached elements, fragments, or other debris from the test article did not penetrate or show potential for penetrating the occupant compartment, or present an undue hazard to other traffic, pedestrians, or work-zone personnel. Deformations of, or intrusions into, the occupant compartment that could have caused serious injury did not occur. Vehicle roll, pitch, and yaw angular displacements were deemed acceptable, because they did not adversely influence occupant risk nor cause rollover. Therefore, test no. UCSS-9 is anticipated to be acceptable according to the MASH 2016 safety performance criteria for test designation no. 3-61.

0.000 sec 0.050 sec 0.100 sec 0.150 sec 0.200 sec

- Test Agency ..... MwRSF
- Test Number UCSS-9
- Date 11/17/2020
- Representative MASH 2016 Test Designation No. 3-61
- Test Article ..... 4-ft tall, 1.12 lb/ft Reflective Delineator
- Key Component – Aluminum Reflective Delineator
  - Dimensions ..... 3 in. x 6 in. x 0.08 in.
  - Mounting Height (Bottom of Delineator) ..... 4 ft
- Key Component – U-Channel Sign Support
  - Length ..... 78 in.
  - Embedment ..... 24 in.
- Soil Type ..... Coarse, crushed limestone (well-graded gravel)
- Vehicle Make /Model ..... Surrogate, Reusable, 1100C Test Vehicle
  - Curb ..... 2,480 lb
  - Test Inertial ..... 2,408 lb
  - Gross Static ..... 2,421 lb
- Impact Conditions
  - Speed ..... 63.8 mph
  - Angle ..... 0 deg.
  - Impact Location ..... Centerline of Front Bumper
- Kinetic Energy ..... 329.6 kip-ft > 288 kip-ft Limit from MASH 2016
- Exit Conditions
  - Speed ..... 63.2 mph
  - Angle ..... 0 deg.
- Vehicle Stability ..... Satisfactory
- Vehicle Stopping Distance ..... N/A
- Vehicle Damage ..... Minimal
  - Parts in Need of Replacement ..... N/A
  - Maximum Interior Deformation ..... N/A

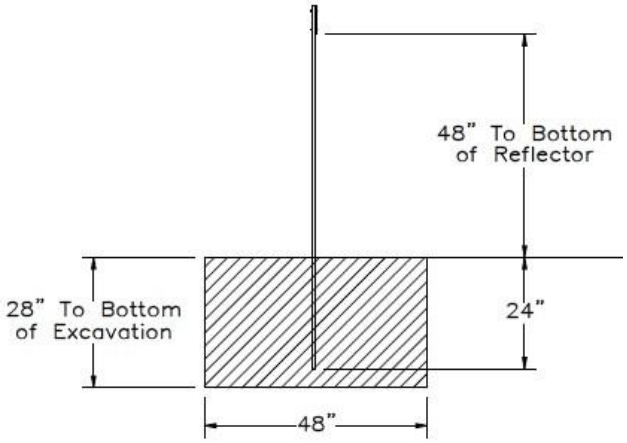

- Transducer Data

Evaluation Criteria		Transducer		MASH 2016 Limit
		SLICE-1 (primary)	SLICE-2	
OIV ft/s	Longitudinal	-1.03	-1.00	±16
	Lateral	0.05	-0.15	±16
ORA g's	Longitudinal	N/A	N/A	N/A
	Lateral	N/A	N/A	N/A
Maximum Angular Displacement deg.	Roll	0.8	1.0	±75
	Pitch	-0.3	0.5	±75
	Yaw	-0.1	0.1	not required

Figure 157. Summary of Representative MASH Test Results and Sequential Photographs, Test No. UCSS-9

11 DIRECT EMBEDMENT 5-FT TALL 4-LB/FT U-CHANNEL SIGN INSTALLATION

11.1 Test No. UCSS-10 Design Details

The test installation for test no. UCSS-10 consisted of a single, U-channel sign support, as shown in Figures 158 through 163. Photographs of the test installation are shown in Figure 164. Material specifications, mill certifications, and certificates of conformity for the system materials are shown in Appendix J.

The sign support was constructed with 4-lb/ft ASTM A499 Grade 80 U-channel, which supported a 36-in. x 36-in. x 0.08-in. aluminum sign panel with reflective sheeting. The sign panel was installed at a height of 5 ft, as measured from the bottom of the sign panel to the ground line. The sign support for test no. UCSS-10 comprised a single, 130-in. long, U-channel sign support directly embedded into coarse, crushed limestone (well-graded gravel) at a depth of 38 in.

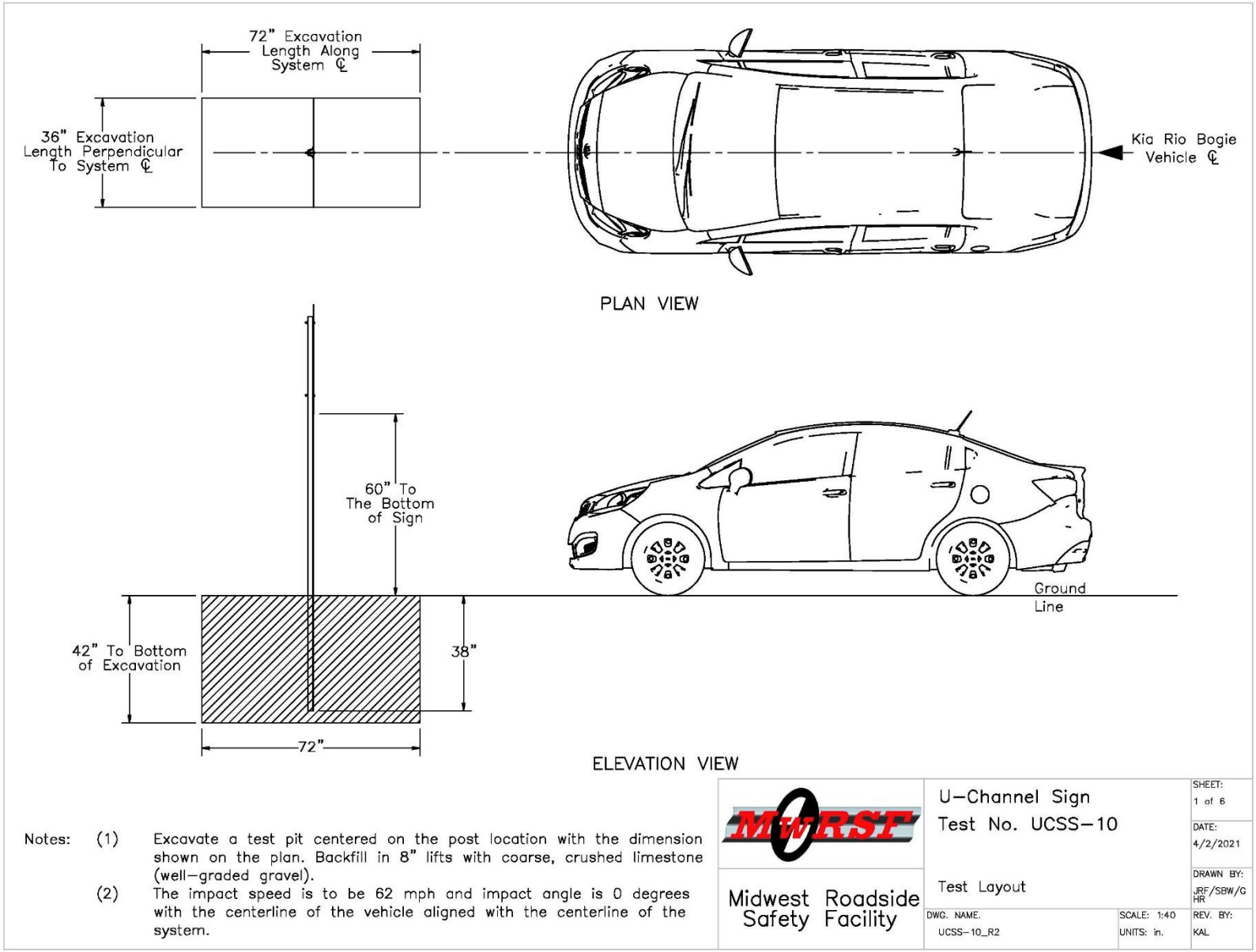

Figure 158. Test Installation Layout, Test No. UCSS-10

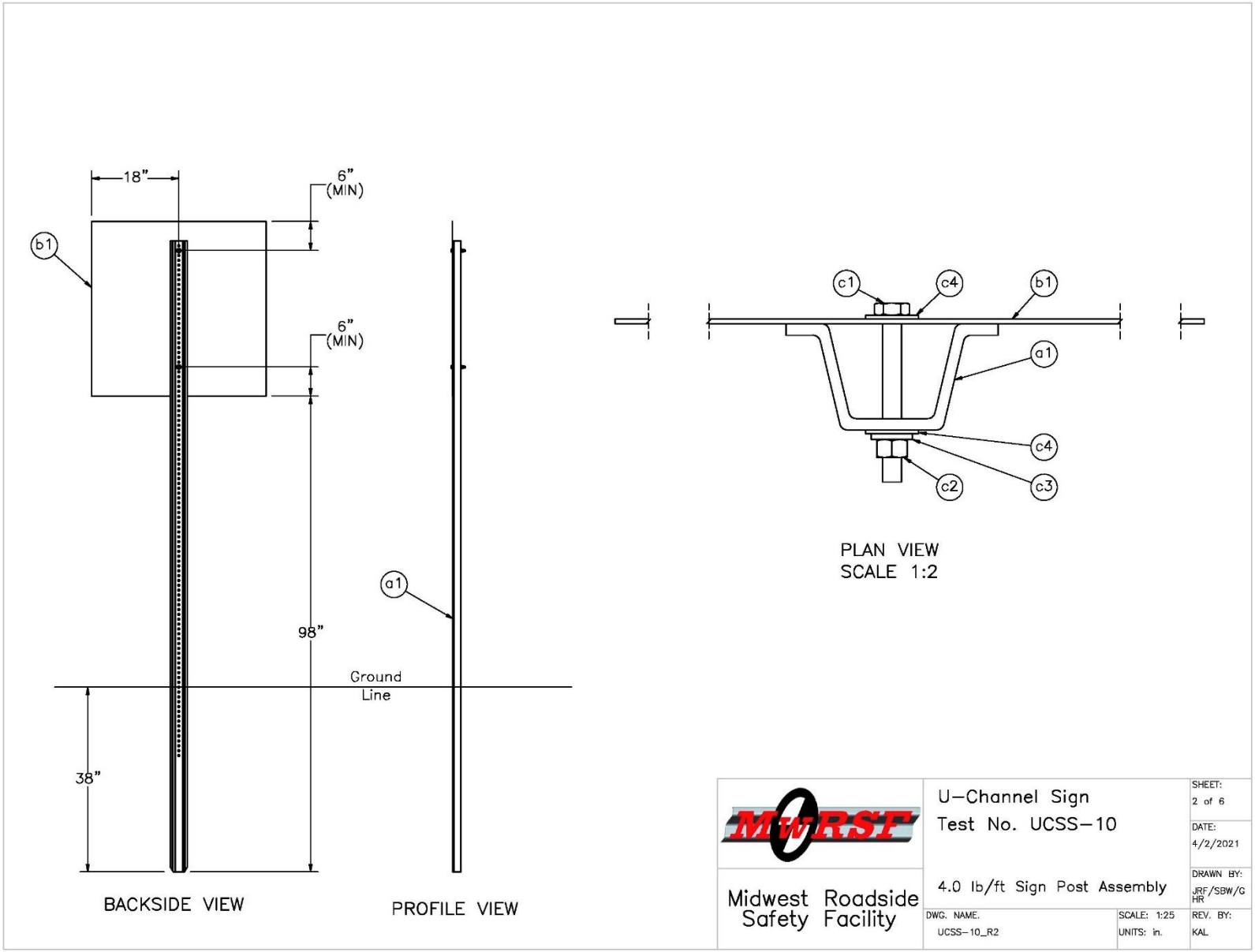

Figure 159. Sign Post Assembly, Test No. UCSS-10

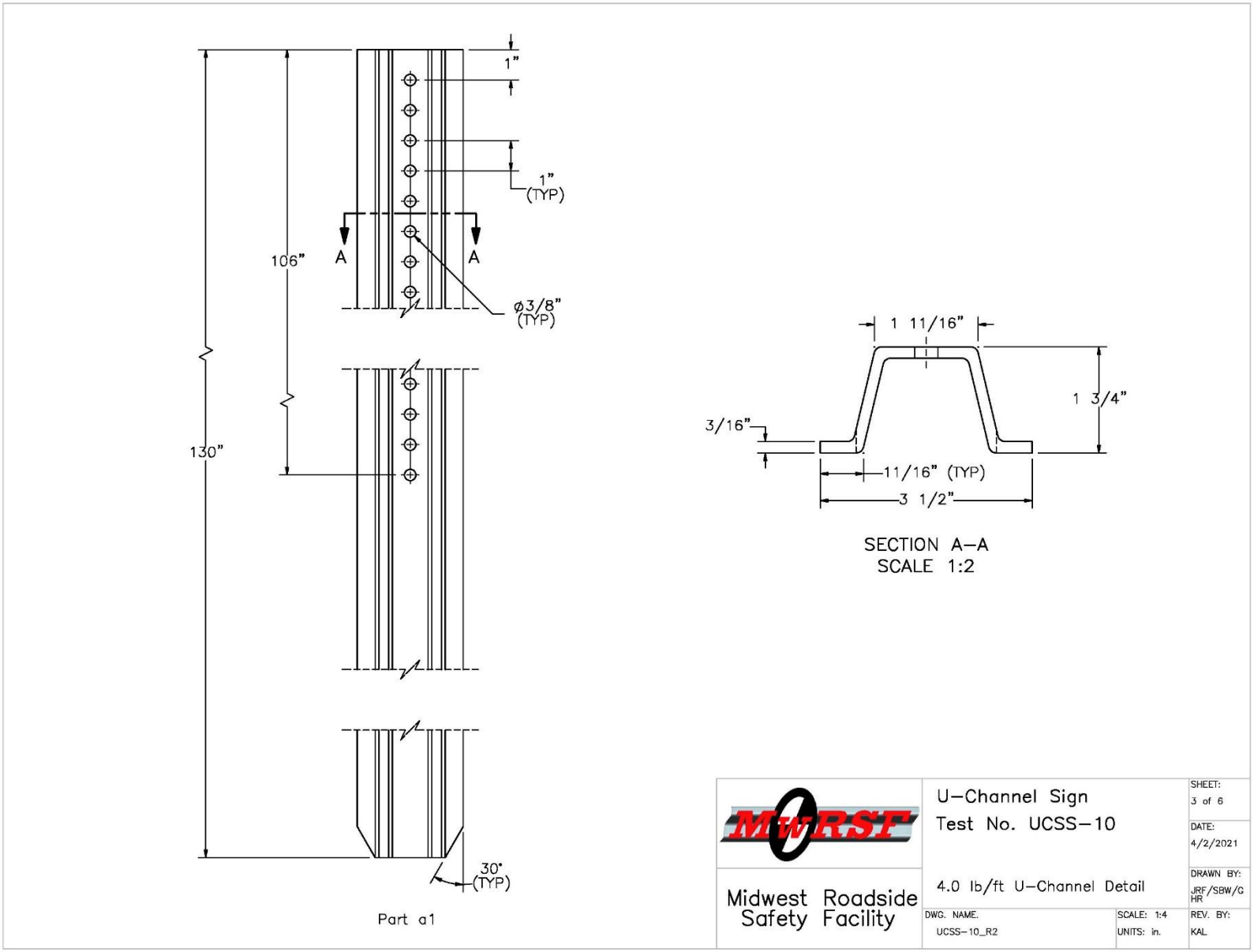

Figure 160. U-Channel Detail, Test No. UCSS-10

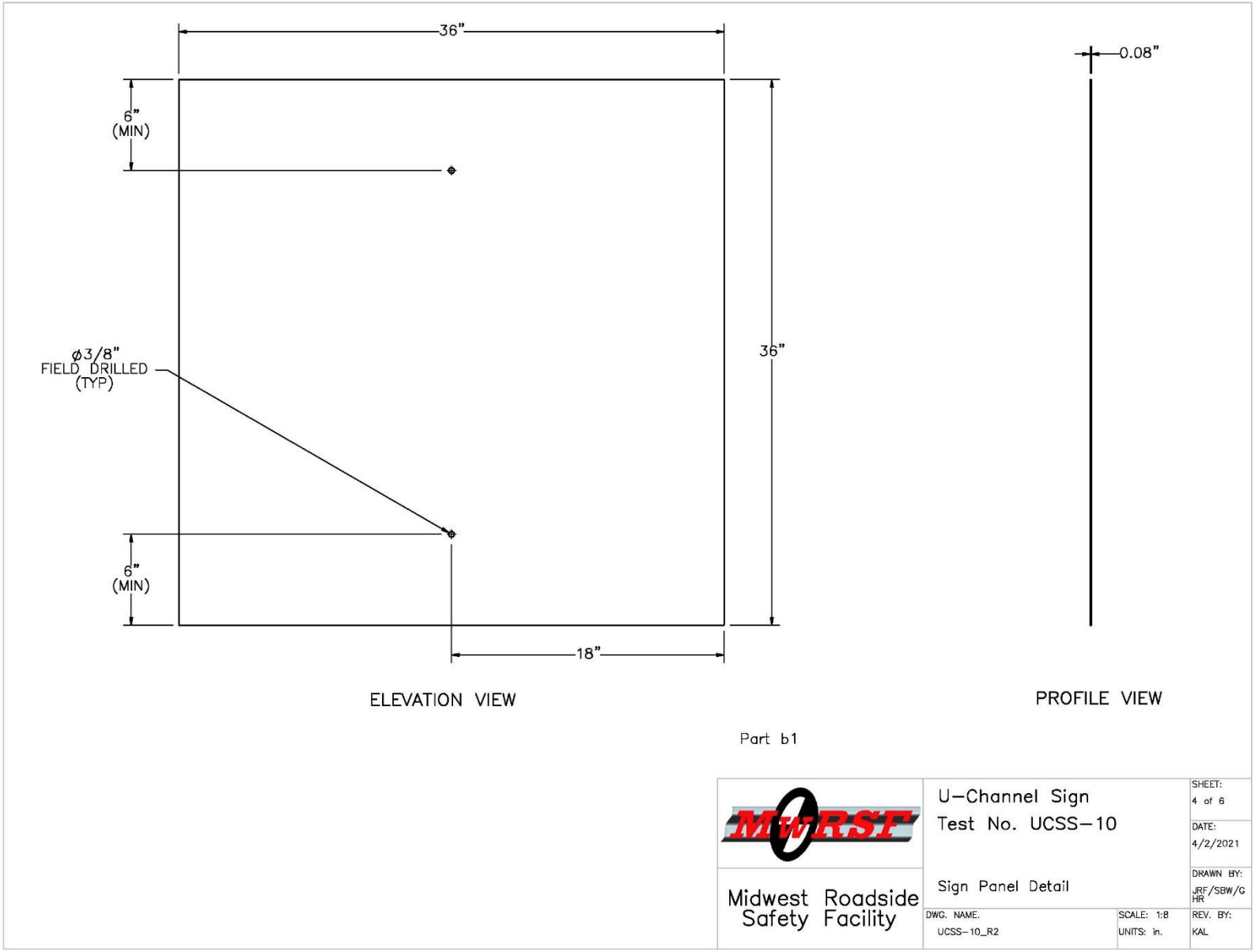

Figure 161. Sign Panel Detail, Test No. UCSS-10

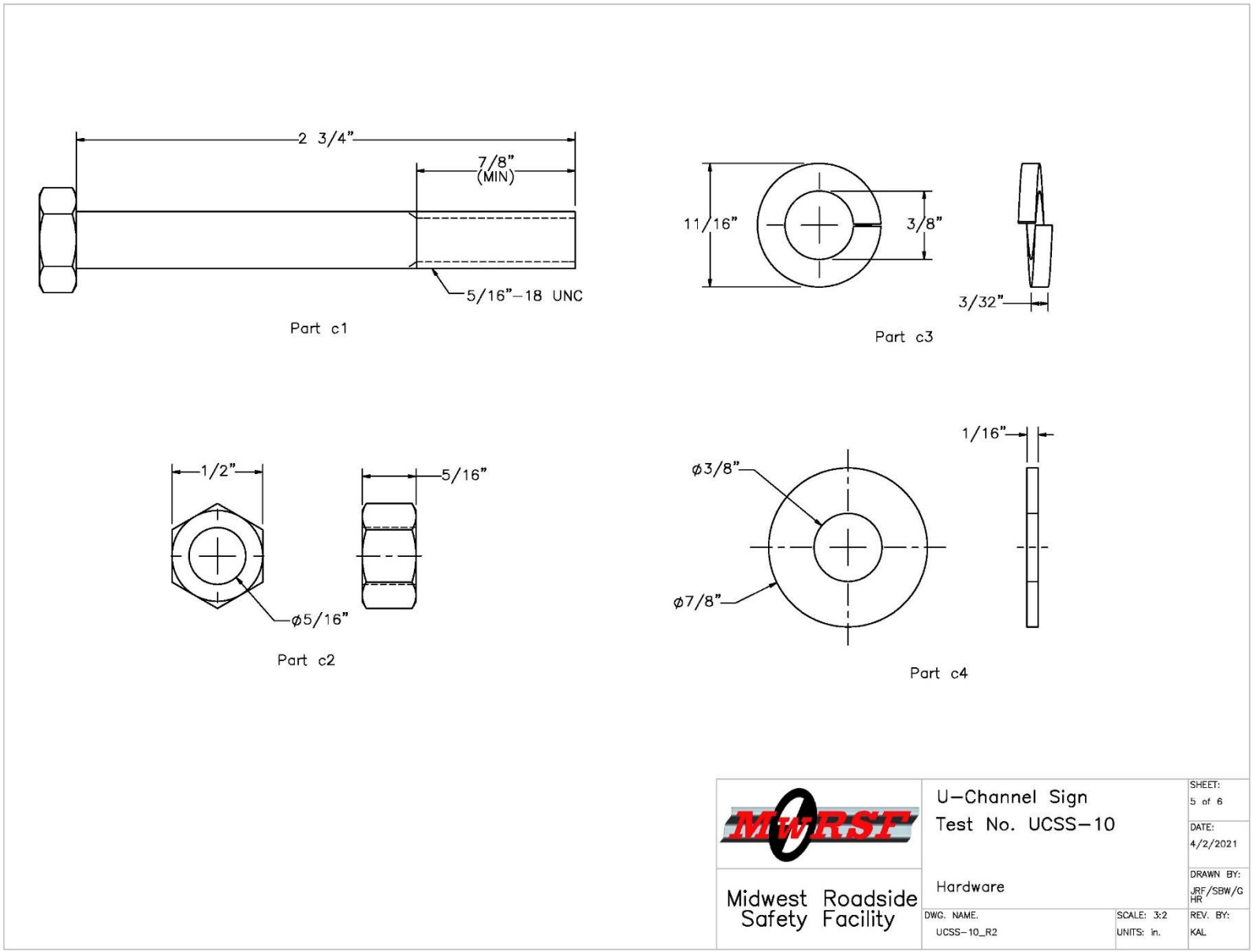

Figure 162. Hardware, Test No. UCSS-10

Item No.	QTY.	Description	Material Specification	Treatment Specification	Hardware Guide
a1	1	4.00 lb/ft U–Channel Sign Post, 130" Long	ASTM A499 Gr. 80 Min. Yield = 80 ksi	ASTM A123	PFP36
b1	1	36"x36"x0.08" Sign with Reflective Sheeting	Aluminum Alloy 5052 or Similar	–	–
c1	2	5/16"–18 UNC, 2 3/4" Long Hex Bolt	SAE J429 Gr. 5 or 9	Fe/ZN 3AN per ASTM F1941	FBX08b
c2	2	5/16"–18 UNC Heavy Hex Nut	SAE J995 Gr. 5 or 9	Fe/Zn 3AN per ASTM F1941	FNX08b
c3	2	3/8" Dia. Lock Washer	Low Carbon Steel	Fe/Zn 3AN per ASTM F1941	–
c4	4	5/16" Dia. Plain Round Washer	Low Carbon Steel	Fe/Zn 3AN per ASTM F1941	FWC08a

Midwest Roadside Safety Facility	U–Channel Sign Test No. UCSS–10		SHEET: 6 of 6
			DATE: 4/2/2021
	Bill of Materials		DRAWN BY: JRF/SBW/GHR
	DWG. NAME. UCSS–10_R2	SCALE: None UNITS: in.	REV. BY: KAL

Figure 163. Bill of Materials, Test No. UCSS-10

Figure 164. Sign Installation, Test No. UCSS-10

11.2 Surrogate, Reusable, 1100C Test Vehicle Test No. UCSS-10

11.2.1 Weather Conditions

Test no. UCSS-10 was conducted on December 2, 2020 at approximately 12:00 p.m. The weather conditions as per the National Oceanic and Atmospheric Administration (station 14939/LNK) were reported and are shown in Table 30.

Table 30. Weather Conditions, Test No. UCSS-10

Temperature	36° F
Humidity	50%
Wind Speed	10 mph
Wind Direction	10° from True North
Sky Conditions	Overcast
Visibility	9.9 Statute Miles
Pavement Surface	Dry
Previous 3-Day Precipitation	0.00 in.
Previous 7-Day Precipitation	0.00 in.
Soil Moisture Content	3.78%

11.2.2 Test Description

The 2,408-lb surrogate, reusable 1100C test vehicle impacted the single, U-channel sign support installation at a speed of 62.4 mph and at an angle of 0 degrees. Impact occurred at the centerline of the surrogate vehicle's front bumper, as shown in Figure 165. The surrogate vehicle came to rest downstream from the installation after brakes were applied. A detailed description of the sequential impact events is contained in Table 31. Sequential photographs are shown in Figure 166. Documentary photographs of the crash test are shown in Figures 167 and 168.

Figure 165. Impact Location, Test No. UCSS-10

Table 31. Sequential Description of Impact Events, Test No. UCSS-10

TIME (sec)	EVENT
0.000	Vehicle's front bumper contacted bottom of sign support at 62.4 mph and 0 degrees.
0.007	Sign support fractured at bumper height.
0.019	Sign support lost contact with vehicle's front bumper.
0.076	Sign panel contacted vehicle's roof.
0.084	Vehicle's roof deformed.
0.123	Sign panel lost contact with vehicle.
0.163	Vehicle cleared sign support stub at 60.4 mph.

0.000 sec

0.050 sec

0.100 sec

0.150 sec

0.200 sec

0.250 sec

0.000 sec

0.050 sec

0.100 sec

0.150 sec

0.200 sec

0.250 sec

Figure 166. Additional Sequential Photographs, Test No. UCSS-10

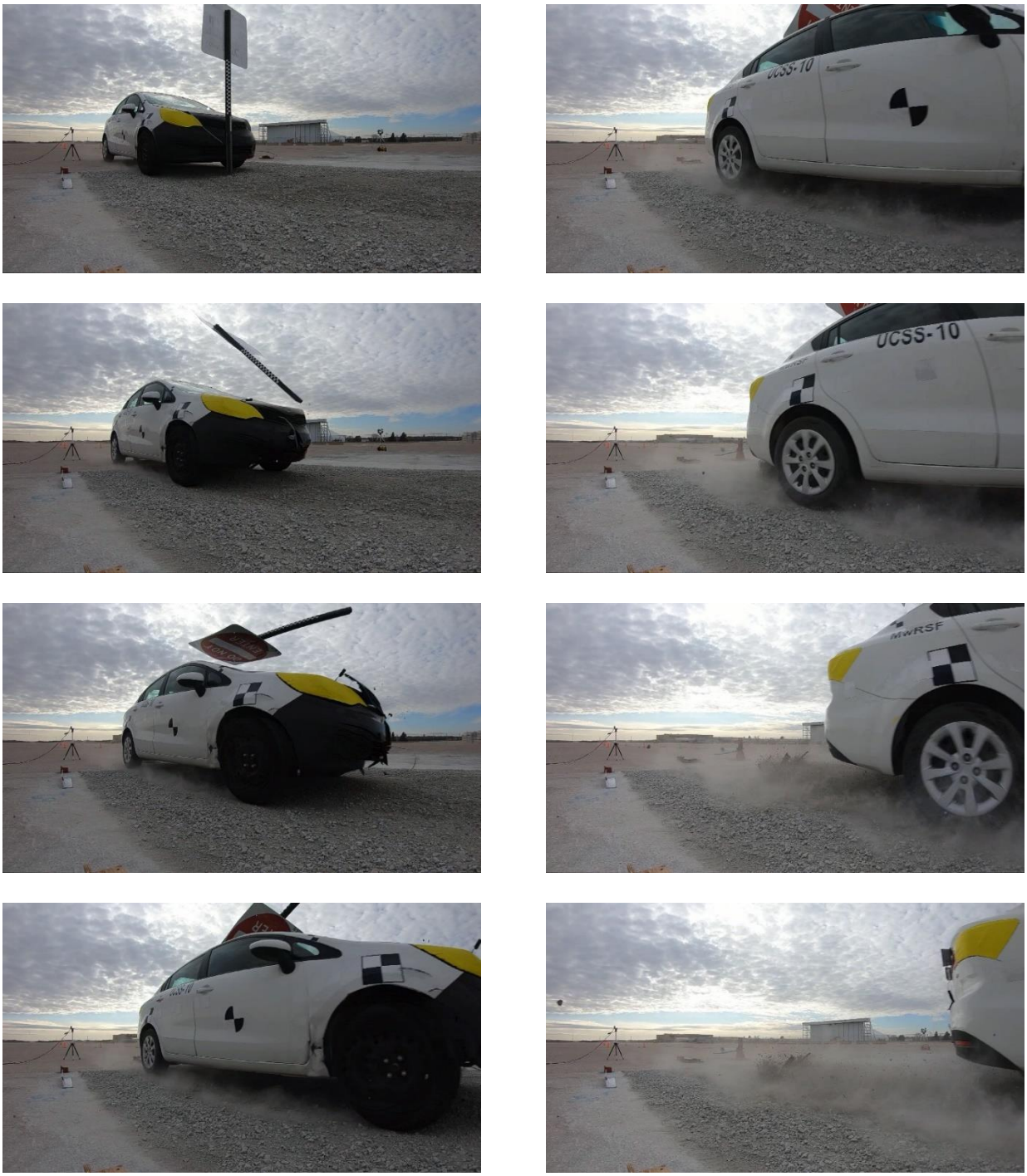

Figure 167. Documentary Photographs, Test No. UCSS-10

Figure 168. Additional Documentary Photographs, Test No. UCSS-10

11.2.3 Sign Panel and U-Channel Support Damage

System damage is shown in Figures 169 and 170. The system was impacted 23¾ in. above the ground. The U-channel sign support fractured approximately 42 in. from the bottom of the sign panel. The lower section of the sign support remained embedded in the ground and yielded backward, extending approximately 11 in. above the ground line. As shown in Figure 170, the lower section of the sign support fractured near the ground line along the perforation and fully unzipped through the length of sign support that extended above the ground line. The sign panel was deformed and scrapes were observed on the front face of the sign panel.

11.2.4 Surrogate, Reusable, 1100C Test Vehicle Damage

The surrogate, reusable, 1100C test vehicle sustained minor damage, as shown in Figures 171 and 172. Damage consisted of deformation and contact marks at the centerline of the front bumper where impact occurred. Additionally, cracking was observed at the lower edge of the front bumper and at the bottom of the windshield near its bracket. The center of the roof was deformed across the approximate width of the roof panel where the secondary sign impact had occurred. The maximum roof deformation was 2.9 in., as measured by LIDAR scanning and shown in Figure 173. While undercarriage contact with the fractured sign support occurred, excessive occupant compartment deformation did not occur, and the limits established in MASH 2016 for the various areas of the occupant compartment were not violated. Following test no. UCSS-10, the bumper and windshield were replaced, and the roof on the surrogate, reusable, 1100C test vehicle was repaired for the subsequent test. Note that MASH criteria has not permitted repairs to damaged structural components on the vehicle, including roof sections, for use in compliant tests.

Figure 169. Sign Installation Damage, Test No. UCSS-10

Figure 170. U-Channel Fractures, Test No. UCSS-10

Figure 171. Vehicle Damage, Test No. UCSS-10

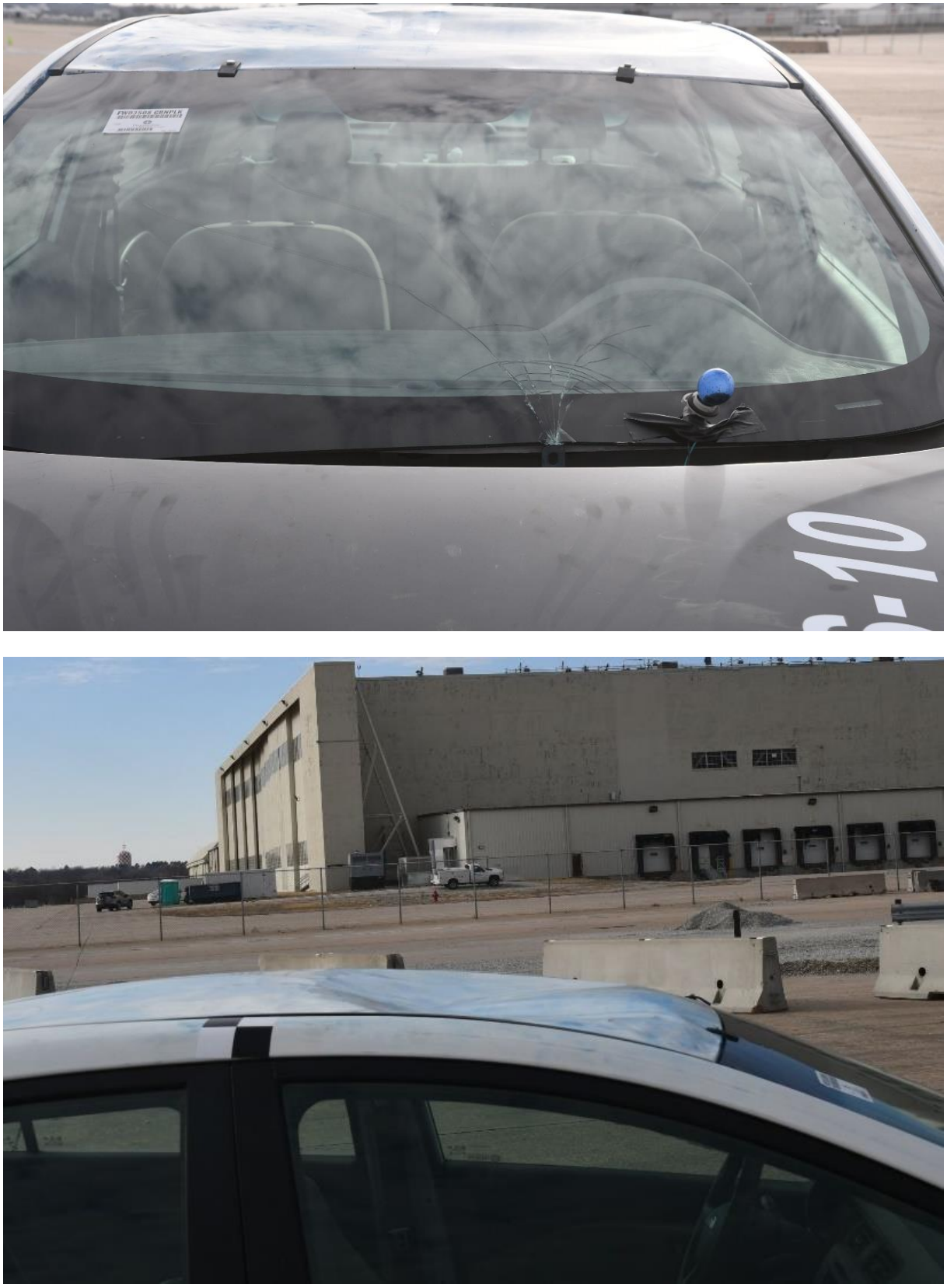

Figure 172. Vehicle Windshield and Roof Damage, Test No. UCSS-10

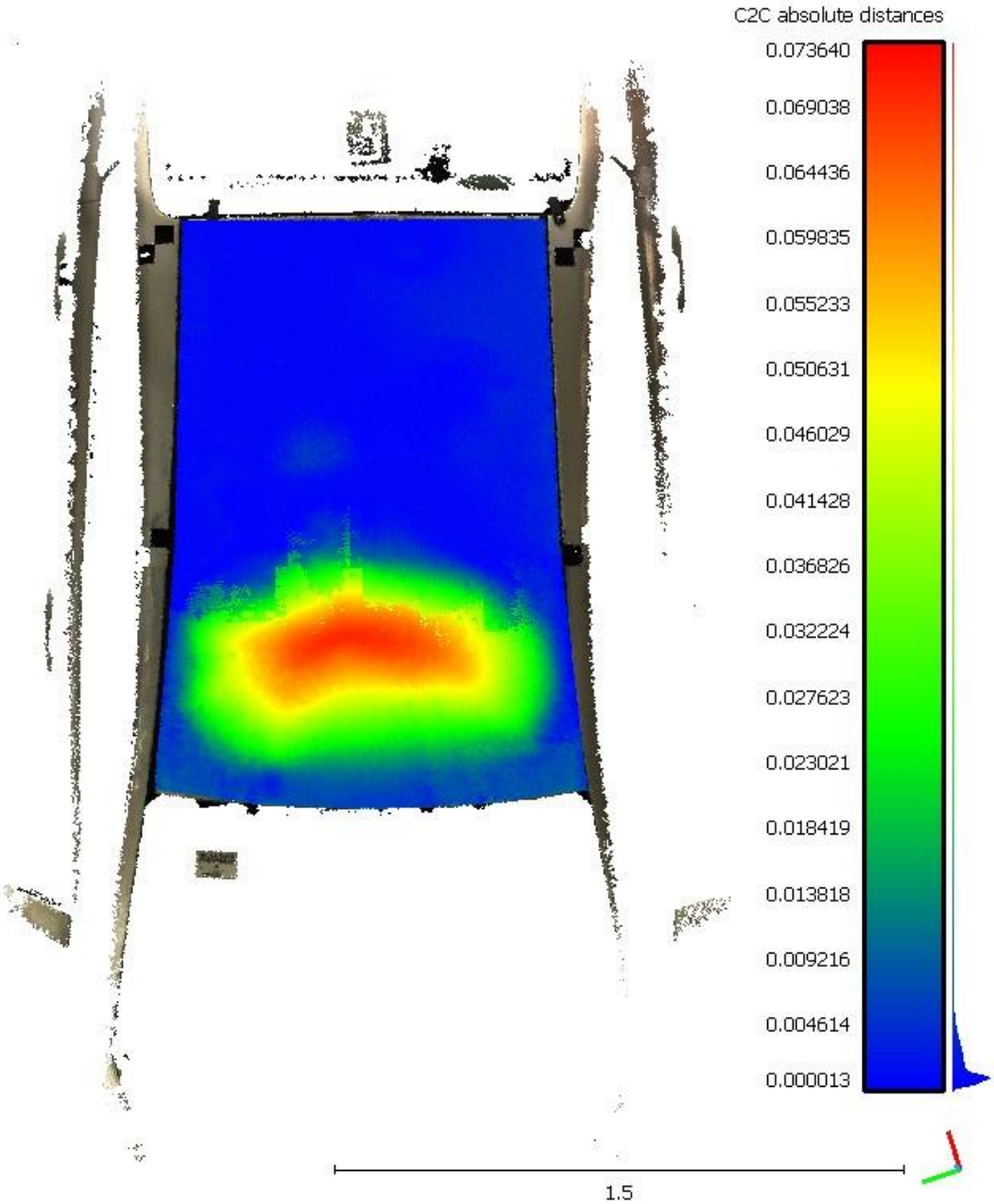

Figure 173. Vehicle Roof Deformation, Test No. UCSS-10 (units = m), Maximum Deformation = 2.9 in.

11.2.5 Occupant Risk

The calculated OIVs and ORAs in both the longitudinal and lateral directions are shown in Table 32. It is important to note that in the test, the impulse on the vehicle was relatively small and of short duration. Thus, *x* and *y* in the flail-space model were less than 2 ft and 1 ft, respectively, during the period when the vehicle was in contact with the system. As specified in Section A5.5.2 of MASH 2016, in such cases, it was recommended that the OIV be set equal to the vehicle's change in velocity that occurred during contact with the test article, or parts thereof [1]. If parts of the test article remain with the vehicle after impact, the vehicle's change in velocity should be computed at the time the vehicle clears the footing or foundation of the test article. For test no. UCSS-10, the OIV, or in this case, the vehicle change in velocity, was reported when the vehicle lost contact with the test article. Note that the OIVs and ORAs were within suggested limits, as provided in MASH 2016. The calculated THIV, PHD, and ASI values are also shown in Table 32.

Table 32. Summary of OIV, ORA, THIV, PHD, and ASI Values, Test No. UCSS-10

Evaluation Criteria		**Transducer**		**MASH 2016 Limits**
		SLICE-1 (primary)	**SLICE-2**	
OIV ft/s	Longitudinal	-2.84	-2.70	±16
	Lateral	-0.20	-0.30	±16
ORA g's	Longitudinal	N/A	N/A	±20.49
	Lateral	N/A	N/A	±20.49
Maximum Angular Displacement deg.	Roll	1.4	1.7	±75
	Pitch	1.4	0.6	±75
	Yaw	0.2	0.1	not required
THIV ft/s		0.00	0.00	not required
PHD g's		4.94	5.48	not required
ASI		0.20	0.18	not required

Note: The vehicle cleared the test article foundation at 0.163 sec after impact for test no. UCSS-10, which was used to determine vehicle change in velocity, denoted as OIV.

N/A = Not Applicable

11.2.6 Discussion

The analysis of the test results for test no. UCSS-10 showed that the system readily activated in a predictable manner when impacted by the surrogate, reusable 1100C test vehicle. A summary of the test results and sequential photographs are shown in Figure 174. Detached elements, fragments, or other debris from the test article did not penetrate or show potential for penetrating the occupant compartment, or present an undue hazard to other traffic, pedestrians, or work-zone personnel. Deformations of, or intrusions into, the occupant compartment that could have caused serious injury did not occur. Vehicle roll, pitch, and yaw angular displacements were deemed acceptable because they did not adversely influence occupant risk nor cause rollover. Therefore, test no. UCSS-10 is anticipated to be acceptable according to the MASH 2016 safety performance criteria for test designation no. 3-61.

0.000 sec 0.050 sec 0.100 sec 0.150 sec 0.200 sec

- Test Agency ..... MwRSF
- Test Number UCSS-10
- Date 12/2/2020
- Representative MASH 2016 Test Designation No. 3-61
- Test Article ..... 5-ft tall, 4 lb/ft U-channel marker sign
- Key Component – Aluminum Sign Panel
  - Dimensions ..... 36 in. x 36 in. x 0.08 in.
  - Mounting Height (Bottom of Sign) ..... 5 ft
- Key Component – U-Channel Sign Support
  - Length ..... 130 in.
  - Embedment ..... 38 in.
- Soil Type ..... Coarse, crushed limestone (well-graded gravel)
- Vehicle Make /Model ..... Surrogate, Reusable, 1100C Test Vehicle
  - Curb ..... 2,480 lb
  - Test Inertial ..... 2,408 lb
  - Gross Static ..... 2,421 lb
- Impact Conditions
  - Speed ..... 62.4 mph
  - Angle ..... 0 deg.
  - Impact Location ..... Centerline of Front Bumper
- Kinetic Energy ..... 314.7 kip-ft > 288 kip-ft Limit from MASH 2016
- Exit Conditions
  - Speed ..... 60.4 mph
  - Angle ..... 0 deg.
- Vehicle Stability ..... Satisfactory
- Vehicle Stopping Distance ..... N/A
- Vehicle Damage ..... Minor
  - Parts in Need of Replacement ..... Bumper, Windshield, Roof (Repaired)
  - Maximum Interior Deformation ..... 2.9 in.

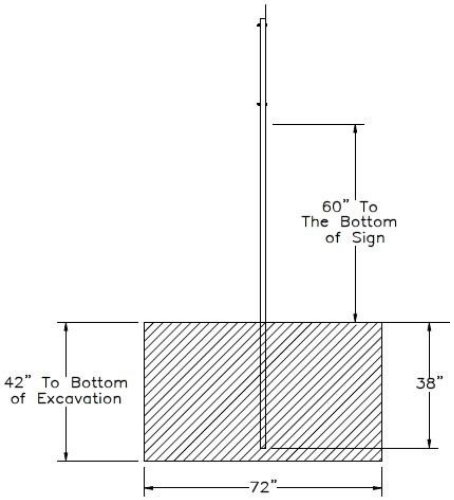

- Transducer Data

Evaluation Criteria		Transducer		MASH 2016 Limit
		SLICE-1 (primary)	SLICE-2	
OIV ft/s	Longitudinal	-2.84	-2.70	±16
	Lateral	-0.20	-0.30	±16
ORA g's	Longitudinal	N/A	N/A	N/A
	Lateral	N/A	N/A	N/A
Maximum Angular Displacement deg.	Roll	1.4	1.7	±75
	Pitch	1.4	0.6	±75
	Yaw	0.2	0.1	not required

Figure 174. Summary of Representative MASH Test Results and Sequential Photographs, Test No. UCSS-10

12 LAP SPLICE 7-FT TALL 4-LB/FT U-CHANNEL SIGN INSTALLATION

12.1 Test No. UCSS-11 Design Details

The test installation for test no. UCSS-11 consisted of a single, U-channel sign support, as shown in Figures 175 through 181. Photographs of the test installation are shown in Figure 182. Material specifications, mill certifications, and certificates of conformity for the system materials are shown in Appendix K.

The sign support was constructed with 4-lb/ft ASTM A499 Grade 80 U-channel, which supported a 36-in. x 36-in. x 0.08-in. aluminum sign panel with reflective sheeting. The sign panel was installed at a height of 7 ft, as measured from the bottom of the sign panel to the ground line. The sign support for test no. UCSS-11 was comprised a 120-in. long upper sign support that was attached to a 42-in. long anchor stub with a lap splice connection. The upper sign support and anchor stub were connected at the lap splice with two $^{5}/_{16}$-in. diameter x 2¼-in. long Grade 9 hex bolts, with ¾-in. diameter x ½-in. wide steel spacers placed between the two U-channel sections. The anchor stub was installed with a 38-in. embedment depth into coarse, crushed limestone (well-graded gravel).

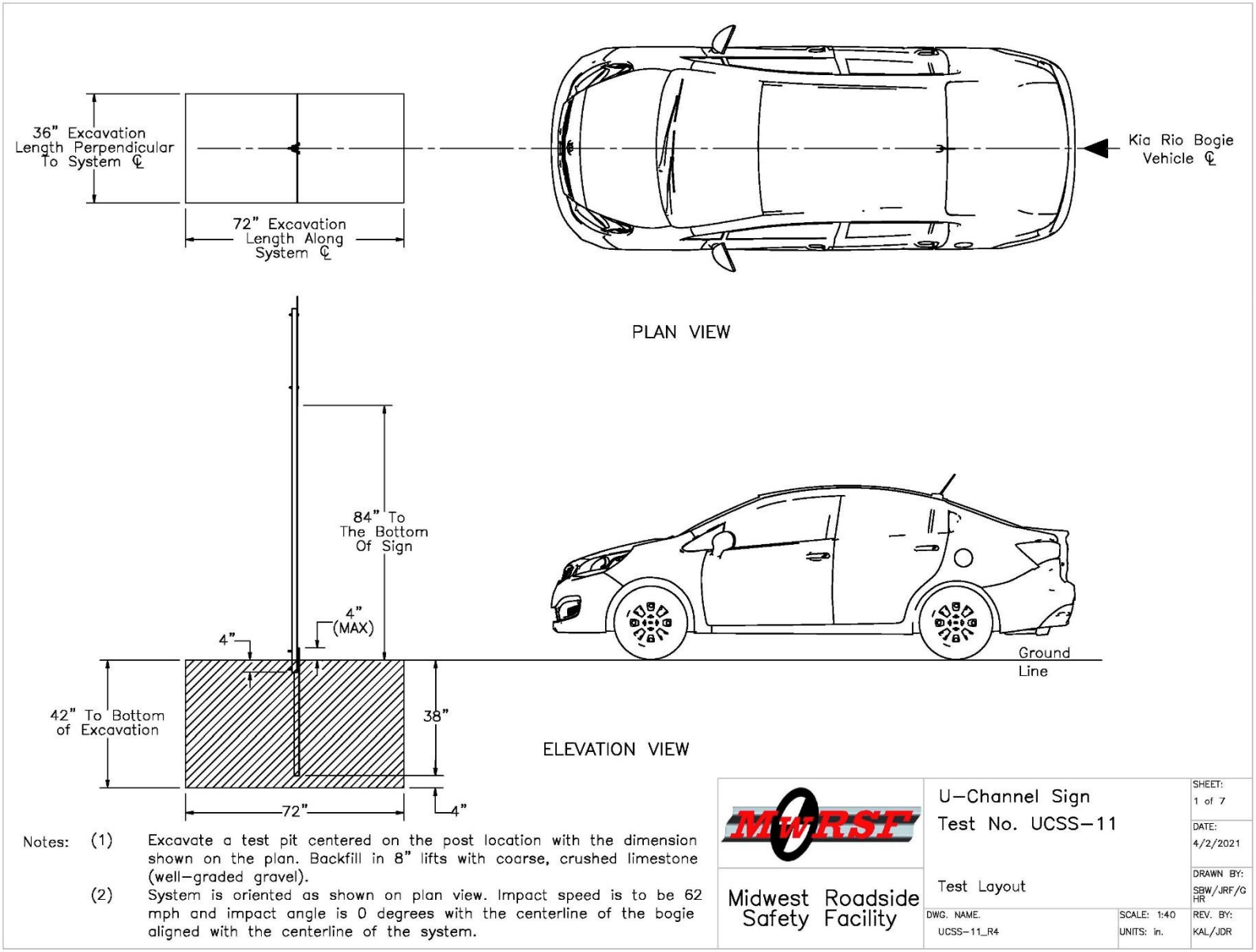

Figure 175. Test Installation Layout, Test No. UCSS-11

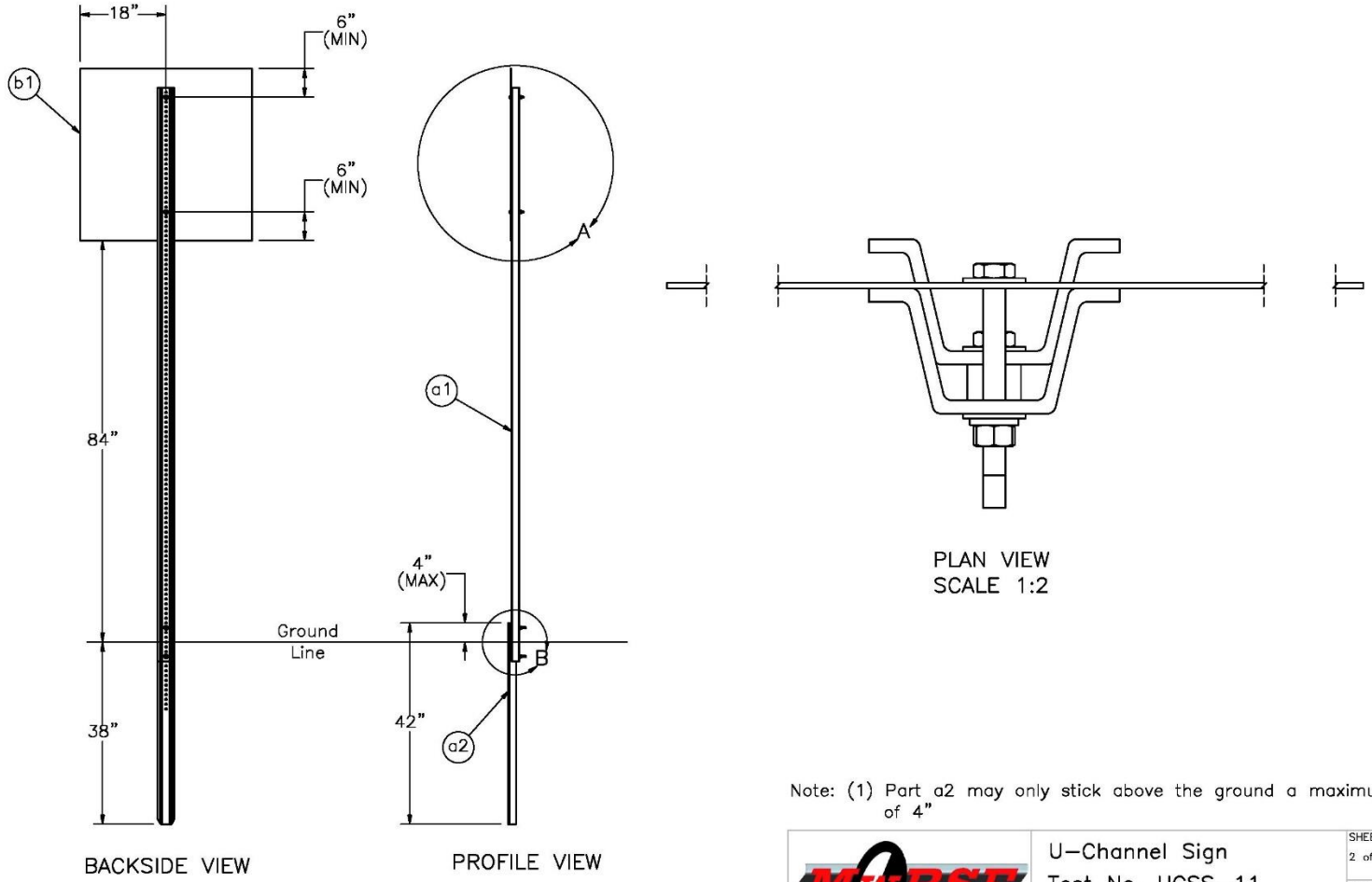

Note: (1) Part a2 may only stick above the ground a maximum of 4"

MwRSF	U–Channel Sign Test No. UCSS–11	SHEET: 2 of 7 DATE: 4/2/2021
Midwest Roadside Safety Facility	4.0 lb/ft Sign Post Assembly	DRAWN BY: SBW/JRF/GHR
	DWG. NAME. UCSS–11_R4 / SCALE: 1:30 / UNITS: in.	REV. BY: KAL/JDR

Figure 176. Sign Post Assembly, Test No. UCSS-11

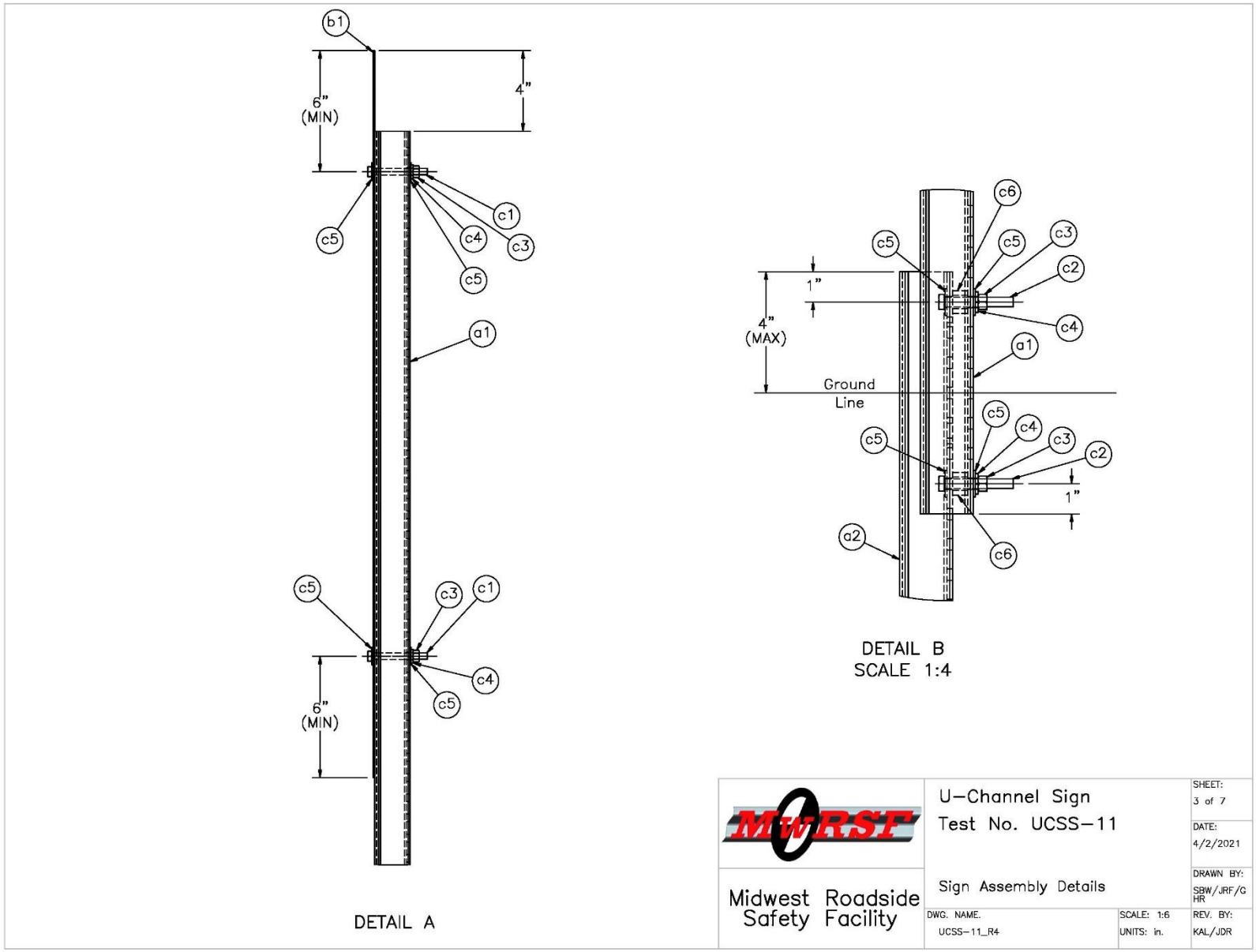

Figure 177. Sign Assembly Details, Test No. UCSS-11

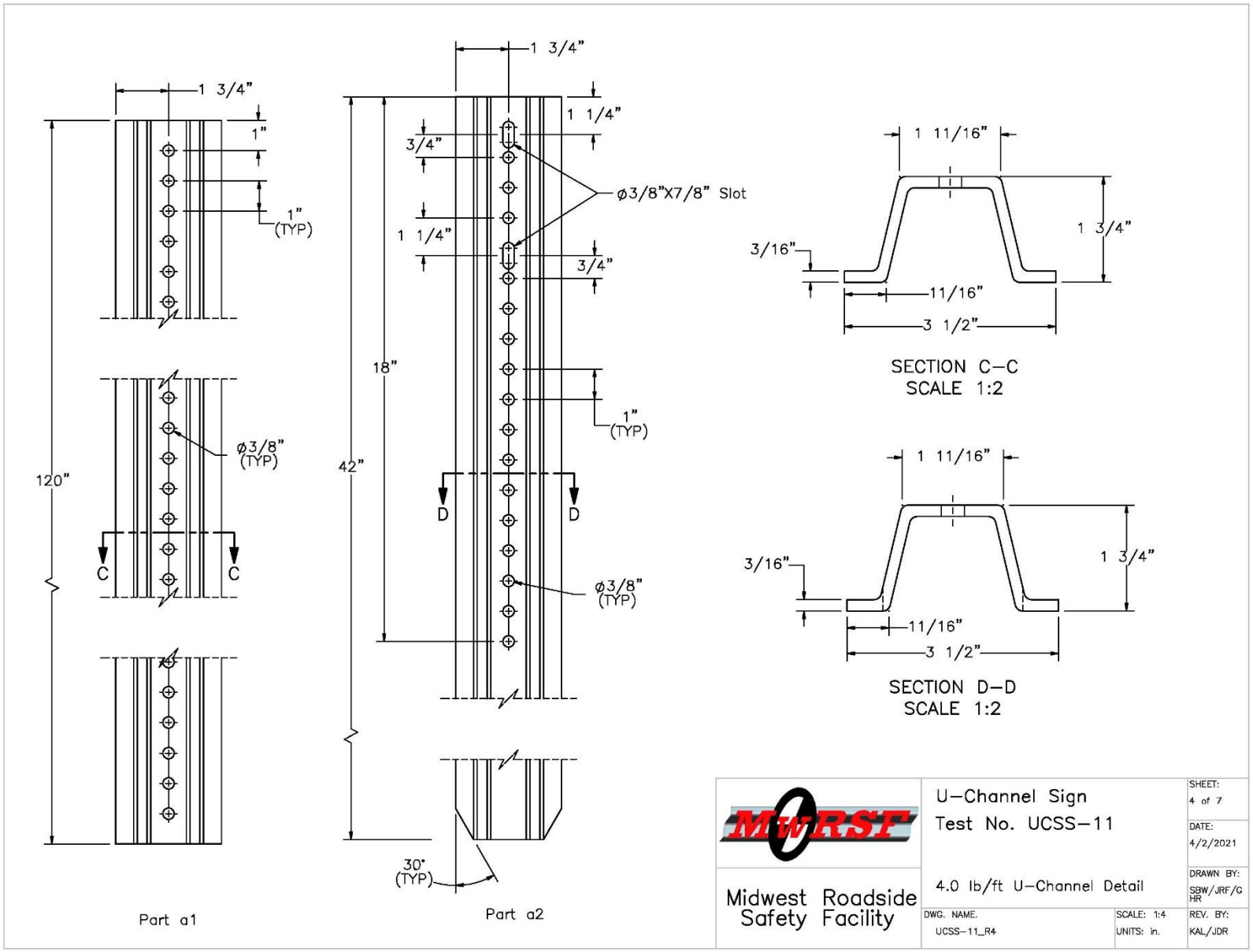

Figure 178. U-Channel Detail, Test No. UCSS-11

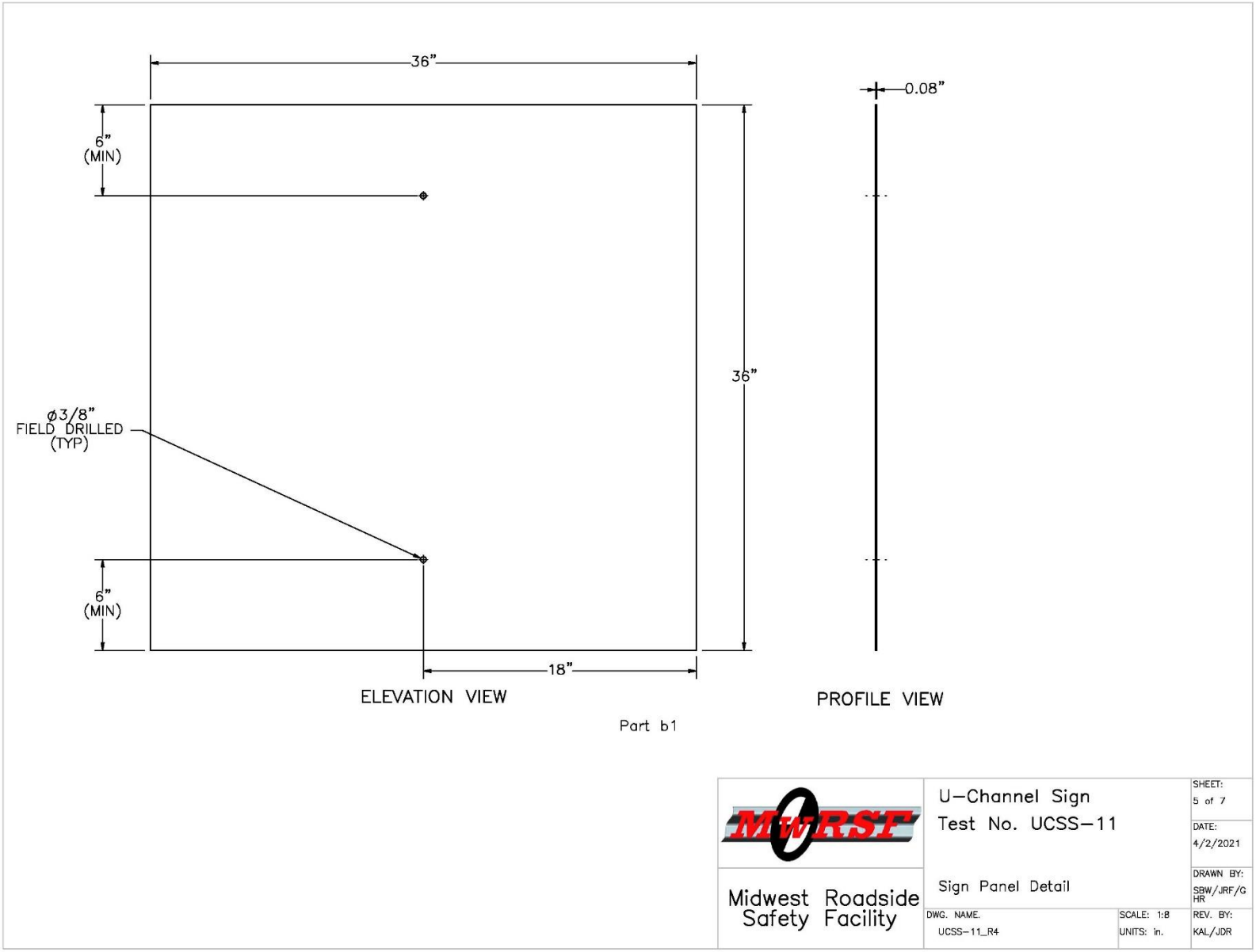

Figure 179. Sign Panel Detail, Test No. UCSS-11

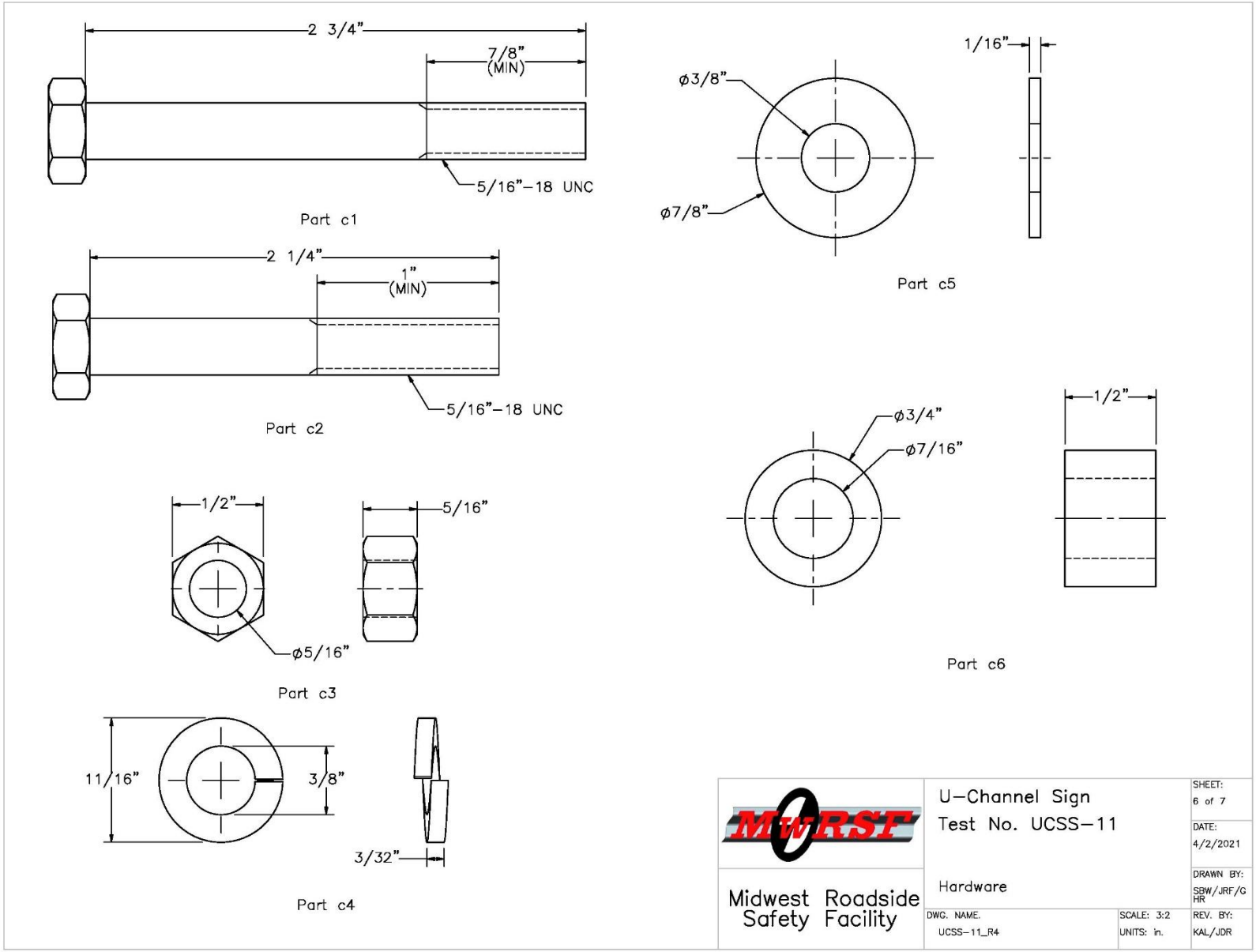

Figure 180. Hardware, Test No. UCSS-11

Item No.	QTY.	Description	Material Specification	Treatment Specification	Hardware Guide
a1	1	4.00 lb/ft U–Channel Sign Post, 120" Long	ASTM A499 Gr. 80 Min. Yield = 80 ksi	ASTM A123	PFP36
a2	1	4.00 lb/ft U–Channel Sign Post, 42" Long	ASTM A499 Gr. 80 Min. Yield = 80 ksi	ASTM A123	PFP36
b1	1	36"x36"x0.08" Sign with Reflective Sheeting	Aluminum Alloy 5052 or Similar	–	–
c1	2	5/16"–18 UNC, 2 3/4" Long Hex Bolt	SAE J429 Gr. 5 or 9	Fe/ZN 3AN per ASTM F1941	FBX08b
c2	2	5/16"–18 UNC, 2 1/4" Long Hex Bolt	SAE J429 Gr. 9	Zinc–Plated	FBX08b
c3	4	5/16"–18 UNC Heavy Hex Nut	SAE J995 Gr. 5 or 9	Fe/Zn 3AN per ASTM F1941	FNX08b
c4	4	3/8" Dia. Lock Washer	Low Carbon Steel	Fe/Zn 3AN per ASTM F1941	–
c5	8	5/16" Dia. Plain Round Washer	Low Carbon Steel	Fe/Zn 3AN per ASTM F1941	FWC08a
c6	2	ø3/4"x1/2" Post Spacer	As Supplied	–	–

* Part c2 may be 2 or 2 1/4 in. in length

MwRSF Midwest Roadside Safety Facility	U–Channel Sign Test No. UCSS–11 Bill of Materials		SHEET: 7 of 7 DATE: 4/2/2021 DRAWN BY: SBW/JRF/GHR
	DWG. NAME. UCSS–11_R4	SCALE: None UNITS: in.	REV. BY: KAL/JDR

Figure 181. Bill of Materials, Test No. UCSS-11

Figure 182. Sign Installation, Test No. UCSS-11

12.2 Surrogate, Reusable, 1100C Test Vehicle Test No. UCSS-11

12.2.1 Weather Conditions

Test no. UCSS-11 was conducted on December 4, 2020 at approximately 12:00 p.m. The weather conditions as per the National Oceanic and Atmospheric Administration (station 14939/LNK) were reported and are shown in Table 33.

Table 33. Weather Conditions, Test No. UCSS-11

Temperature	49° F
Humidity	41%
Wind Speed	6 mph
Wind Direction	330° from True North
Sky Conditions	Sunny
Visibility	9.94 Statute Miles
Pavement Surface	Dry
Previous 3-Day Precipitation	0.00 in.
Previous 7-Day Precipitation	0.00 in.
Soil Moisture Content	3.63%

12.2.2 Test Description

The 2,408-lb surrogate, reusable, 1100C test vehicle impacted the single, U-channel sign support installation at a speed of 61.1 mph and at an angle of 0 degrees. Impact occurred at the centerline of the surrogate vehicle's front bumper, as shown in Figure 183. The surrogate vehicle came to rest downstream from the installation after brakes were applied. A detailed description of the sequential impact events is contained in Table 34. Sequential photographs are shown in Figure 184. Documentary photographs of the crash test are shown in Figures 185 and 186.

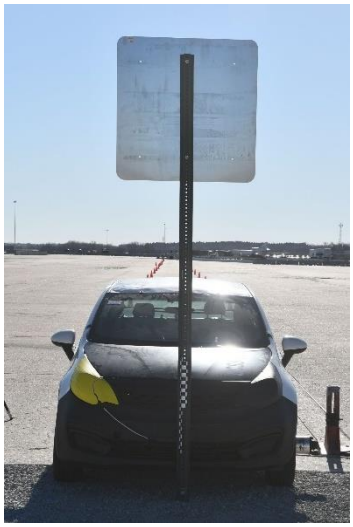

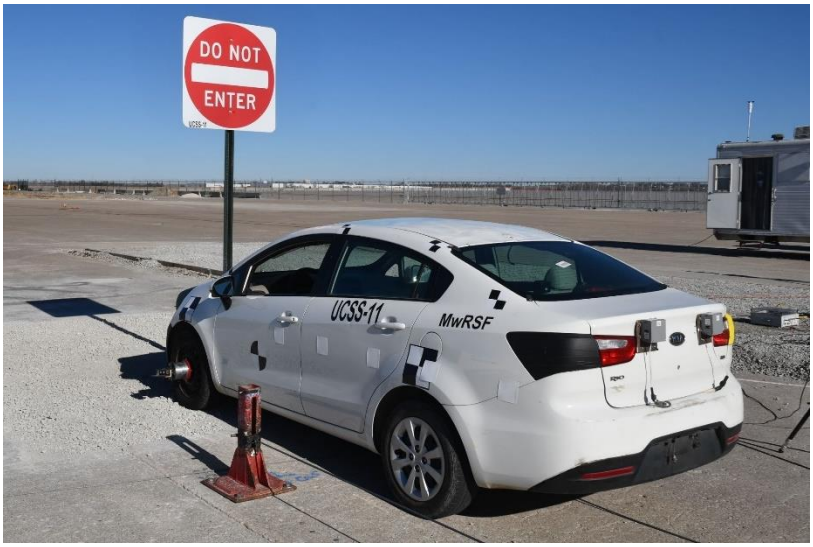

Figure 183. Impact Location, Test No. UCSS-11

Table 34. Sequential Description of Impact Events, Test No. UCSS-11

TIME (sec)	EVENT
0.000	Vehicle's front bumper contacted bottom of sign support at 61.1 mph and 0 degrees.
0.001	Vehicle's front bumper deformed.
0.011	Sign support contacted vehicle's hood and vehicle's hood deformed.
0.023	Sign support fractured at bumper height and disengaged from anchor stub.
0.037	Lower section of fractured sign support contacted ground.
0.044	Sign support lost contact with vehicle's front bumper.
0.132	Sign panel contacted vehicle's roof.
0.149	Vehicle's rear windshield shattered.
0.173	Vehicle cleared sign support stub traveling at 56.9 mph.
0.256	Sign panel lost contact with vehicle.

0.000 sec

0.050 sec

0.100 sec

0.150 sec

0.200 sec

0.250 sec

0.000 sec

0.050 sec

0.100 sec

0.150 sec

0.200 sec

0.250 sec

Figure 184. Additional Sequential Photographs, Test No. UCSS-11

Figure 185. Documentary Photographs, Test No. UCSS-11

Figure 186. Additional Documentary Photographs, Test No. UCSS-11

12.2.3 Sign Panel and U-Channel Support Damage

System damage is shown in Figures 187 and 188. The system was impacted 23¾ in. above the ground. Both the upper and lower stub bolts disengaged, releasing the upper U-channel sign support. The upper U-channel sign support fractured approximately 58 in. from the bottom of the sign panel. As shown in Figure 187, the lower fractured section of the U-channel sign support deformed and fractured. The sign panel was deformed due to the secondary impact. The sign support stub displaced downstream in the soil, but was undamaged and extended approximately 4 in. above the ground line. Soil gouging was observed downstream from the impact location, as shown in Figure 188.

12.2.4 Surrogate, Reusable, 1100C Test Vehicle Damage

The surrogate, reusable, 1100C test vehicle sustained moderate damage, as shown in Figures 189 and 190. Damage consisted of significant deformation located at the centerline of the front bumper where impact had occurred. The front bumper was crushed inward into the radiator and the center of the vehicle's hood was deformed. The rear of the roof was deformed across the approximate width of the vehicle where the secondary sign impact had occurred, and the rear windshield was shattered. The maximum roof deformation was 3.3 in., as measured by LIDAR scanning and shown in Figure 191. Excessive occupant compartment deformation did not occur, and the limits established in MASH 2016 for the various areas of the occupant compartment were not violated.

During the test, the sign support fractured in two locations. The lower fractured portion of the sign support rotated down and contacted the ground as well as the surrogate, reusable, 1100C test vehicle's undercarriage. No contact between the fractured lower post and floor pan or occupant compartment area was observed, and although no spearing, protrusion, or excessive floorpan deformation occurred, a potential existed for the test article to contact or penetrate the occupant compartment floorpan due to the test article fracture. This sign support behavior is shown in Figure 193.

Per guidance issued by AASHTO in May 2018 [14], rear window shattering is considered unacceptable if the test article makes direct contact with the window and if there is any identifiable penetration of the test article into the occupant compartment. Although there is currently no research to indicate if this test outcome is correlated with serious injuries, the roadside safety community has defaulted to a conservative position until further research can be conducted on the correlation of rear window shattering and occupant injury. Rear window shattering when bridged by a structural member or by damage to the roof or "C"-pillar are still considered acceptable. During test no. UCSS-11, the rear window was penetrated due to test article direct contact, as shown in Figure 192. Therefore, the outcome is determined to be unacceptable according to MASH 2016.

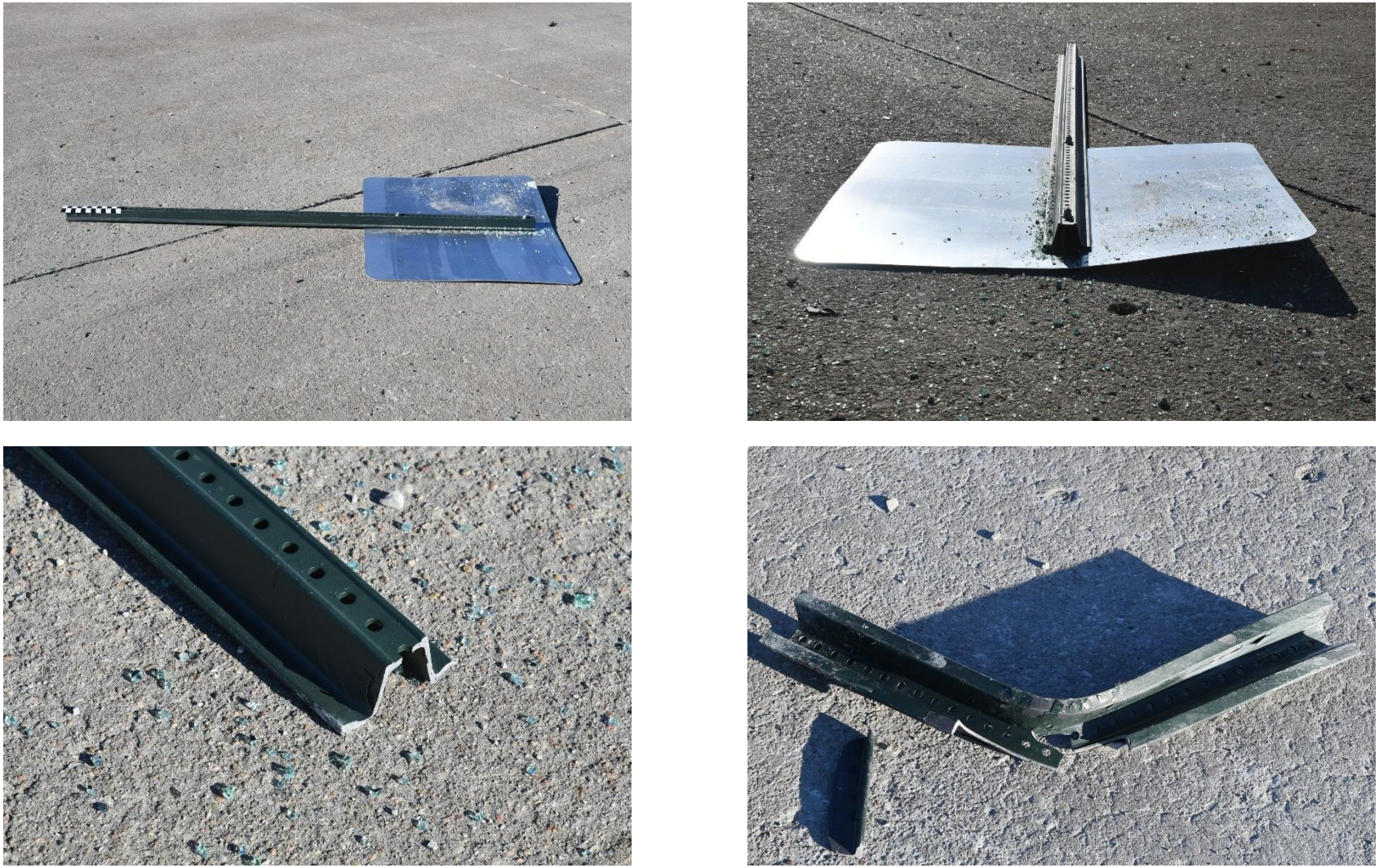

Figure 187. Sign Installation Damage, Test No. UCSS-11

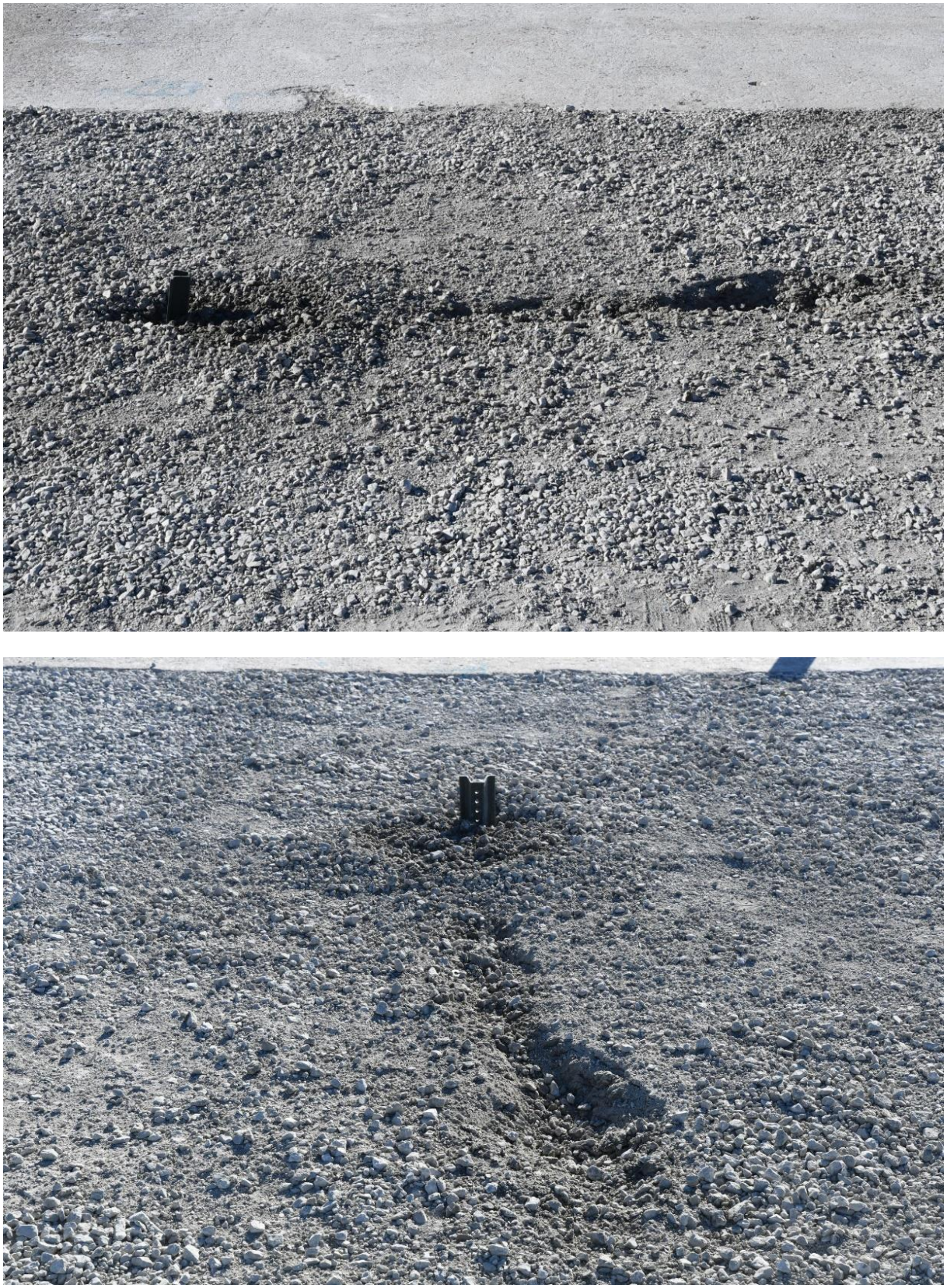

Figure 188. Anchor Stub and Soil Damage, Test No. UCSS-11

Figure 189. Vehicle Damage, Test No. UCSS-11

Figure 190. Vehicle Roof Damage, Test No. UCSS-11

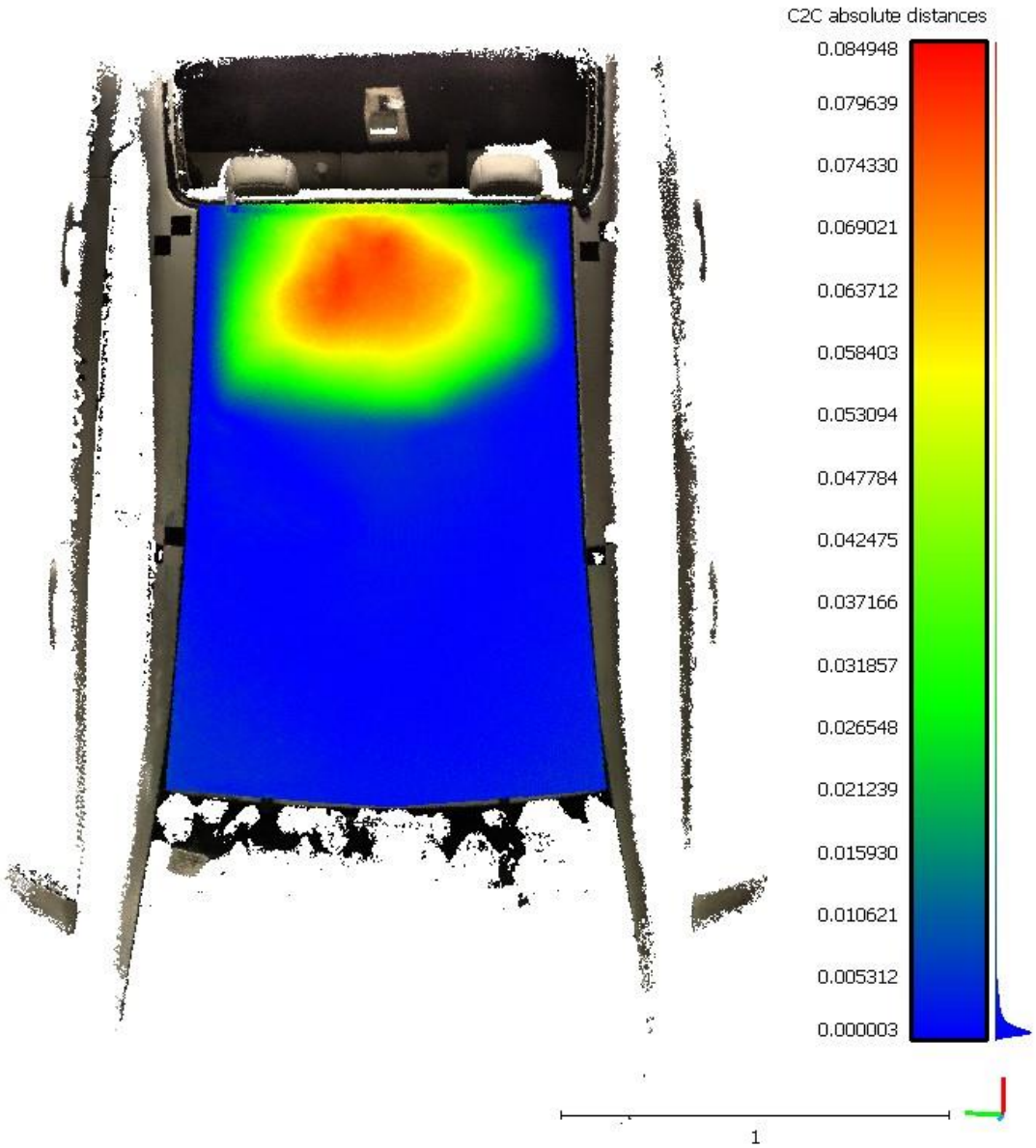

Figure 191. Vehicle Roof Deformation, Test No. UCSS-11 (units = m), Maximum Deformation = 3.3 in.

Figure 192. Test Article Penetration into Rear Window, Test No. UCSS-11

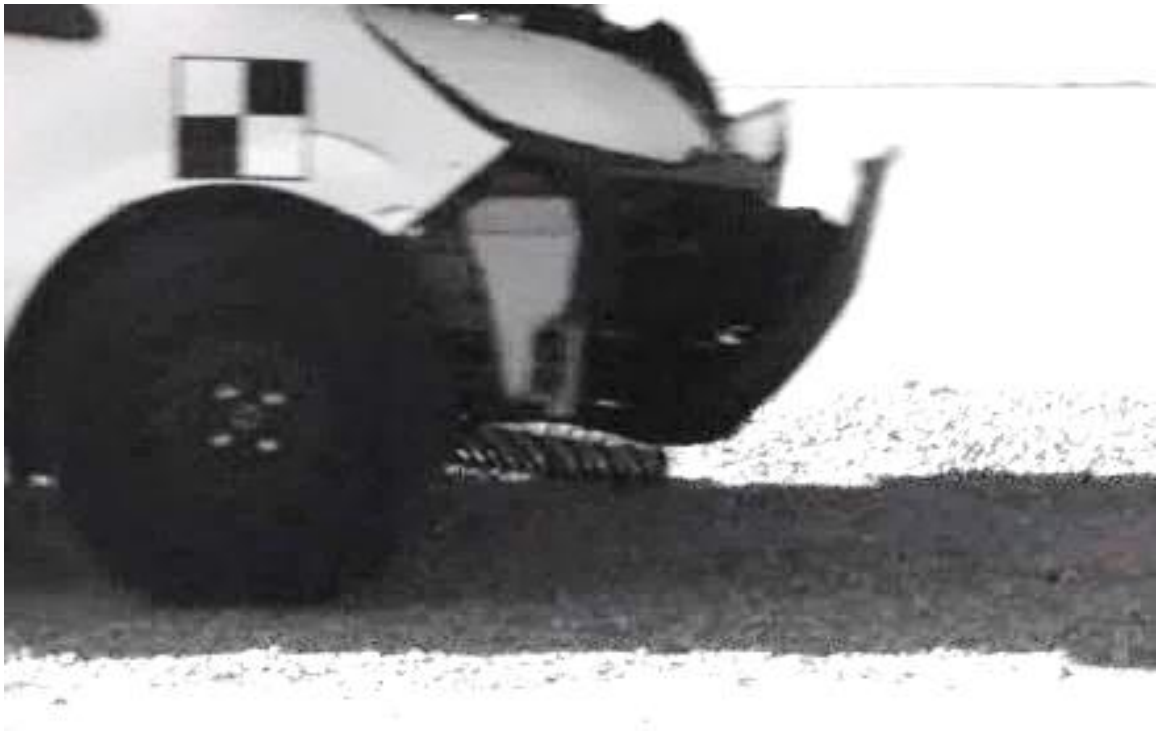

Figure 193. Fractured and Overriden Portion of Post During Test No. UCSS-11

12.2.5 Occupant Risk

The calculated OIVs and ORAs in both the longitudinal and lateral directions are shown in Table 35. It is important to note that in the test, the impulse on the vehicle was relatively small and of short duration. Thus, *x* and *y* in the flail-space model were less than 2 ft and 1 ft, respectively, during the period when the vehicle was in contact with the system. As specified in Section A5.5.2 of MASH 2016, in such cases, it was recommended that the OIV be set equal to the vehicle's change in velocity that occurred during contact with the test article, or parts thereof [1]. If parts of the test article remain with the vehicle after impact, the vehicle's change in velocity should be computed at the time the vehicle clears the footing or foundation of the test article. For test no. UCSS-11, the OIV, or in this case, the vehicle change in velocity, was reported when the vehicle lost contact with the test article. Note that the OIVs and ORAs were within suggested limits, as provided in MASH 2016. The calculated THIV, PHD, and ASI values are also shown in Table 35.

Table 35. Summary of OIV, ORA, THIV, PHD, and ASI Values, Test No. UCSS-11

Evaluation Criteria		Transducer		MASH 2016 Limits
		SLICE-1 (primary)	SLICE-2	
OIV ft/s	Longitudinal	-6.66	-6.37	±16
	Lateral	0.64	0.95	±16
ORA g's	Longitudinal	N/A	N/A	±20.49
	Lateral	N/A	N/A	±20.49
Maximum Angular Displacement deg.	Roll	-1.3	-1.9	±75
	Pitch	0.6	0.7	±75
	Yaw	0.9	1.0	not required
THIV ft/s		0.00	0.00	not required
PHD g's		11.10	15.68	not required
ASI		0.31	0.29	not required

Note: The vehicle cleared the test article foundation at 0.173 sec after impact for test no. UCSS-11, which was used to determine vehicle change in velocity, denoted as OIV.

N/A = Not Applicable

12.2.6 Discussion

The analysis of the test results for test no. UCSS-11 showed that the system readily activated in a predictable manner when impacted by the surrogate, reusable, 1100C test vehicle. A summary of the test results and sequential photographs are shown in Figure 194. Detached elements, fragments, or other debris from the test article penetrated the occupant compartment, but it did not present an undue hazard to other traffic, pedestrians, or work-zone personnel. Deformations of, or intrusions into, the occupant compartment that could have caused serious injury did occur, as the sign panel shattered and penetrated the rear window of the vehicle. Vehicle roll, pitch, and yaw angular displacements were deemed acceptable, because they did not adversely influence occupant risk nor cause rollover. Therefore, test no. UCSS-11, when impacted by the surrogate, reusable, 1100C test vehicle, was anticipated to be unacceptable according to the MASH 2016 safety performance criteria for test designation no. 3-61.

0.000 sec | 0.050 sec | 0.100 sec | 0.150 sec | 0.200 sec

- Test Agency ..... MwRSF
- Test Number UCSS-11
- Date 12/4/2020
- Representative MASH 2016 Test Designation No. 3-61
- Test Article ..... 7-ft tall, 4 lb/ft U-channel marker sign
- Key Component – Aluminum Sign Panel
  - Dimensions ..... 36 in. x 36 in. x 0.08 in.
  - Mounting Height (Bottom of Sign) ..... 7 ft
- Key Component – U-Channel Sign Support
  - Length (Upper Support) ..... 120 in.
  - Length (Lower Stub) ..... 42 in.
  - Embedment ..... 38 in.
- Soil Type ..... Coarse, crushed limestone (well-graded gravel)
- Vehicle Make /Model ..... Surrogate, Reusable, 1100C Test Vehicle
  - Curb ..... 2,480 lb
  - Test Inertial ..... 2,408 lb
  - Gross Static ..... 2,421 lb
- Impact Conditions
  - Speed ..... 61.1 mph
  - Angle ..... 0 deg.
  - Impact Location ..... Centerline of Front Bumper
- Kinetic Energy ..... 301.8 kip-ft > 288 kip-ft Limit from MASH 2016
- Exit Conditions
  - Speed ..... 56.9 mph
  - Angle ..... 0 deg.
- Vehicle Stability ..... Satisfactory
- Vehicle Stopping Distance ..... N/A
- Vehicle Damage ..... Moderate
  - Parts in Need of Replacement ..... Bumper, Hood, Rear Windshield, Roof
  - Maximum Interior Deformation ..... 3.3 in.

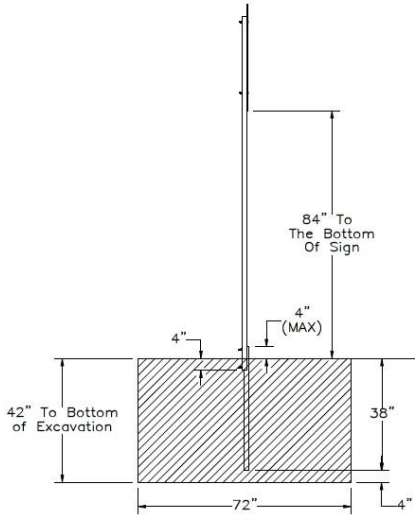

- Transducer Data

Evaluation Criteria		Transducer		MASH 2016 Limit
		SLICE-1 (primary)	SLICE-2	
OIV ft/s	Longitudinal	-6.66	-6.37	±16
	Lateral	0.64	0.95	±16
ORA g's	Longitudinal	N/A	N/A	N/A
	Lateral	N/A	N/A	N/A
Maximum Angular Displacement deg.	Roll	-1.3	-1.9	±75
	Pitch	0.6	0.7	±75
	Yaw	0.9	1.0	not required

Figure 194. Summary of Representative MASH Test Results and Sequential Photographs, Test No. UCSS-11

13 DYNAMIC SIGN BEHAVIOR ANALYSIS

During this research effort, no full-scale or surrogate test vehicle component tests were conducted according to MASH test designation no. 3-62. As a result, the sign supports evaluated in this study were not evaluated according to the full MASH safety performance criteria. A dynamic sign behavior analysis was performed to develop a mathematical model to estimate the time, angular velocity, and location of secondary contact between the top of a sign installation and the impacting vehicle in order to predict how the sign support system would perform during an impact with a 2270P pickup truck vehicle. The model accounted for the geometry of the sign installation, fracture location, vehicle speed, and vehicle dimensions. Once developed, the mathematical model was calibrated with existing full-scale crash tests. Two different calibration methods were explored and are discussed herein. Once calibrated, each method was used to estimate the angular velocity and secondary impact location for sign installation impacts with the MASH 2270P vehicle.

13.1 Mathematical Model Development

The majority of the analysis considered the behavior of the upper portion of the sign support after the post fractured and/or released from the foundation. The analysis consisted of seven steps:

1) First, the longitudinal deflection of the sign support at the point of contact with the vehicle and at the time of fracture from the foundation or stub post was estimated using high-speed digital video analysis. The displacement of the sign support at the point of contact at the time of fracture was used to estimate the initial angular offset at fracture compared to a vertical line.

2) The longitudinal velocity of the sign support at the point of vehicle contact was recorded using high-speed digital video analysis in the Redlake MotionScope software program. According to principles of impact and motion, the velocity of the sign support at the point of contact with the vehicle will be equal to the velocity of the impacting vehicle plus separation velocity of the elastic rebound. The separation velocity is related to the Coefficient of Restitution (COR) between the two bodies. The COR was calculated for each test based on the parameters recorded from the high-speed digital video analysis.

3) The angular velocity of the sign support was calculated based on the change in sign support orientation in time.

4) Next, the location of the c.g. of the upper, fractured portion of the sign support system was calculated using mass and section properties of the sign support and sign panel. Rigid-body planar movements were assumed when estimating the c.g. location of the upper fractured sign support. The c.g. calculation accommodated for the actual sign support fracture location (H_{break}), as shown in Figure 195 and written in Equation 1.

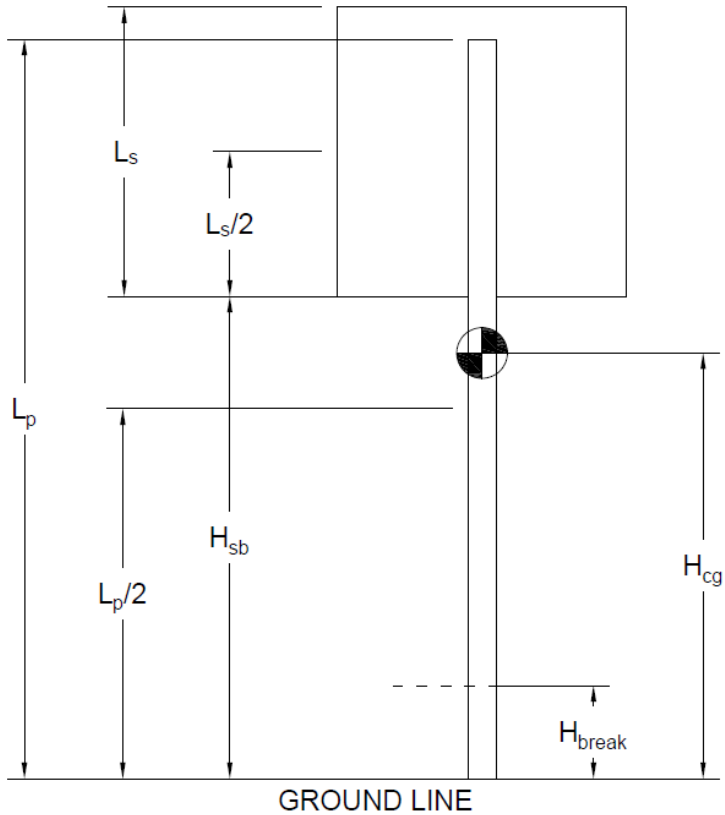

Figure 195. Single, U-Channel Sign Support Installation Diagram

$$H_{cg} = \frac{w_{post}}{w_{total}}\left(\frac{L_p}{2}\right) + \frac{w_{sign}}{w_{total}}\left(H_{sb} + \frac{L_s}{2}\right) + H_{break}\left(1 - \left(\frac{w_{post}+2w_{sign}}{2w_{total}}\right)\right) \quad (1)$$

Where $w_{total} = w_{post} + w_{sign}$.

5) The longitudinal velocity of the sign support's c.g. was estimated using the separation velocity of the sign support at the point of contact with the vehicle. This calculation relied on the deflection of the sign support at the point of contact with the vehicle, the separation velocity of the sign support from the vehicle, and sign support post orientation, as shown in Figure 196 and Equation 2.

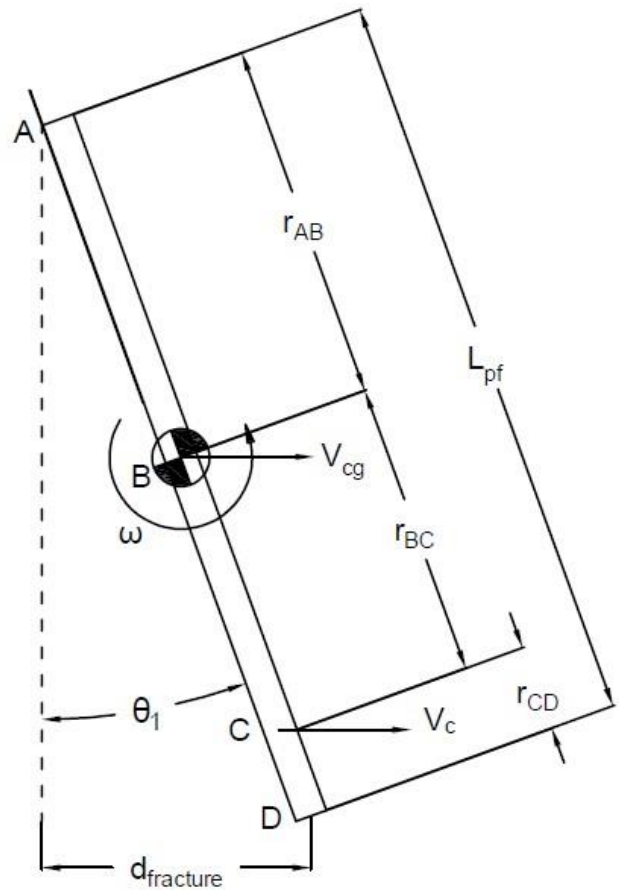

Figure 196. Sign Support Kinematics after Fracture (Method 1)

A = top of sign support
B = center-of-gravity (c.g.) of sign support
C = effective sign support point of contact with vehicle
D = fractured end of sign support (note, corresponds to H_{break})
r_{AB} = distance between the top of sign support and sign support c.g.
r_{BC} = distance between sign support c.g. and the effective point of contact with vehicle
r_{CD} = distance between the effective point of contact with vehicle and the fractured lower end of sign support
$V_{c.g.}$ = effective longitudinal movement of sign support at sign support c.g., in direction of vehicle
V_C = translational velocity of sign support at point of contact with vehicle, in direction of vehicle
L_{pf} = total length of fractured sign support
$d_{fracture}$ = longitudinal distance moved by base of sign support at point of fracture, in direction of vehicle
θ_1 = angled of sign support at time of calculation, with respect to the vertical
ω = angular velocity of sign support, with respect to the vehicle's pitch axis

$$V_{c.g.,x} = \omega * r_{ab} * \cos(\theta_1) \quad (2)$$

The upper fractured sign support velocity was estimated using two methods:

a. **Method 1:** The uppermost point of the sign support did not move longitudinally during the impact. Utilizing the assumption that the longitudinal velocity of the top of the sign support is zero, the angular velocity of the detached sign installation about the c.g. is written in Equation 3.

$$\omega = \frac{(1+C)*V_{vehicle}}{(L_{pf-r_{cd}})\cos(\theta_1)} \tag{3}$$

Where θ_1 is the angle of the sign support at fracture relative to the vertical axis located at the initial point of impact. This method permitted verification between the calculated and measured angular velocities.

b. **Method 2:** A percussion center corresponding to an instantaneous center of rotation of the sign support acted as a rotational hinge, and did not move longitudinally during impact. The location of the percussion center was calculated using initial sign conditions and the sign support's angular velocity. This method will be discussed in greater detail below.

The first method was preferred due to the simplicity of the resulting kinematic relationships and ability to verify the angular velocity estimates. When it was determined that significant correction factors were needed to improve correlation with test results, the secondary method was used and results were greatly improved.

6) The time at which the sign support contacted the roof of the test vehicle was estimated. This estimation was accomplished by calculating the rotation angle of the upper fractured sign support such that the top of the sign support was at equal elevation above the ground as the roof of the test vehicle and dividing the rotation angle by the angular velocity of the fractured sign support, as shown in Equation 4. Note that it was assumed the angular velocity did not change as a result of wind resistance or external factors acting on the sign support during rotation.

$$t_{contact} = [\frac{\pi}{2} - \theta_1 + \theta_2]\frac{1}{\omega} \tag{4}$$

7) Lastly, the estimated point of contact between the rotating sign support and the test vehicle's roof was estimated. Using the amount of time for the sign support to rotate such that the top of the sign support arrived at the test vehicle's roof line, the difference in longitudinal displacements between the test vehicle and the fractured sign support c.g. was calculated, as shown in Equations 5 and 6. The longitudinal displacement was therefore calculated relative to the point of impact and was correlated with a location on the roof relative to the leading top edge of the windshield.

$$\Delta x_{vehicle} = t_{contact} * V_{vehicle} \tag{5}$$

$$\Delta x_{sign\ top} = V_{c.g.} * t_{contact} - \omega r_{AB}(\sin\theta_2 - \sin\theta_1) \tag{6}$$

$$X_{roof\ contact} = x_{ref} + \left(\Delta x_{sign\ top} - \Delta x_{vehicle}\right) \tag{7}$$

where $\Delta x_{vehicle}$ is the change in position of the vehicle (and equivalently the top of the windshield), $\Delta x_{sign\ top}$ is the displacement of the top of the sign after the point of fracture, x_{ref} is the initial longitudinal distance between the top of the sign, and the windshield at the point of fracture, and $X_{roof\ contact}$ is the longitudinal distance of the sign support's point of contact with the vehicle relative to the leading front edge of the windshield.

If the c.g. height of the fractured sign installation was lower than the height of the vehicle roof, contact at the roofline and/or windshield would be less likely to occur than windshield or hood contact, and this method may not be applicable for those conditions.

The changes in elevation due to gravity were neglected for this analysis. This assumption was justified based on observations that the separation velocity of the sign support with the vehicle had both a longitudinal and upward component, such that the sign support engaged in a parabolic path with small upward starting velocity, producing small differences in the c.g. vertical location at the time of contact with the roof. Initial attempts to estimate the contribution from the combined effects of the vertical initial velocity and the drop due to gravity greatly complicated the analysis and led to uncertainty and error, whereas neglecting gravity by assuming that the vehicle intersected the sign support at a location corresponding to the same initial c.g. height correlated very well with results.

13.2 Model Calibration

The mathematical model was calibrated with the results from several crash tests, including test nos. UCSS-4, UCSS-6, UCSS-8, and UCSS-10 as well as test no. UCSS-1c [6]. For each of the physical tests, the longitudinal displacement of the sign support in contact with the vehicle's bumper, fracture height from ground line, angular velocity, secondary impact location, and installation c.g. height were recorded from the high-speed crash-test footage. The test installation and impact parameters were then entered into the mathematical model to represent each of the compared full-scale tests.

13.2.1 Method 1 Calibration

In the first calibration method, the COR was adjusted to match the angular velocity of the fractured sign installation observed during physical testing. However, when the appropriate angular velocity was achieved, the location of the sign contact position was not representative of the secondary impact location observed in physical testing. For each of the compared tests, the calculated secondary impact occurred upstream from the location observed in testing, and the relative difference between the vehicle velocity and sign installation c.g. velocity was incorrect. Thus, a correction factor was introduced which increased the relative difference in velocities by reducing the velocity of the sign's c.g. This enabled the calculator to be tuned to match the angular velocity and secondary impact location that occurred during physical testing. However, this correction factor did not have physical significance in dynamics relationships.

Using the correction factor, the coefficient of restitution and the angular velocities of the sign supports were tuned to the test results. Results of the evaluation which represented the test data are shown in Table 36.

Table 36. Method 1 Tuned COR and Correction Factors

Test No.	UCSS-1c	UCSS-4	UCSS-6	UCSS-8	UCSS-10	AVG.
Coefficient of Restitution (COR)	0.38	0.25	0.60	0.47	0.45	0.43
Correction Factor (% Reduction of Sign c.g. Velocity)	80	28	66	59	68	60

The objective of this evaluation was to develop a tool to predict impact performance with the 2270P vehicle or for sign supports which behaved similarly to those in this test. Thus, a single predictive value of the COR and single tunable method for a calculator was preferred. To generate a "best fit" model, an average of the values of the COR and the correction factor were used to build a predictive model. Using these values for COR and correction factors, the tests were re-calculated and the resulting model-predicted results are shown in Tables 37 and 38.

Table 37. Method 1 – Comparison of Empirical and Model-Predicted Angular Velocities

Test Name	UCSS-1c	UCSS-4	UCSS-6	UCSS-8	UCSS-10
Model-Predicted Angular Velocity rad/s	21.4	23.0	16.9	17.3	23.0
Actual Angular Velocity rad/s	20.7	20.1	18.9	17.8	23.4
Difference	0.7	2.9	-2.0	-0.5	-0.4
% Error	3.4	14.4	-10.6	-2.8	-1.7

Table 38. Method 1 – Comparison of Empirical and Model-Predicted Roof Contact Locations

Test Name	UCSS-1c	UCSS-4	UCSS-6	UCSS-8	UCSS-10
Model-Predicted Roof Contact Location in.	21.2	17.5	59.8	66.4	20.4
Actual Roof Contact Location in.	34.2	12.2	51.2	62.2	23.8
Difference	-13.0	5.3	8.6	4.2	-3.4
% Error	-38.0	43.4	16.8	6.8	-14.3

The correction factor in the model was not linked to physical events nor explainable differences, so a secondary model was proposed which moved the effective instantaneous center of rotation of the sign support to a different location at the time of sign support fracture. This location was the percussion center, as previously noted. Results of the investigation using Method 2 are presented below.

13.2.2 Method 2 Calibration

The rotation of the sign support through the percussion center after the time of fracture slightly modified the schematic and kinematic relationships of the sign behavior. The height of the percussion center was deemed (H_o) and is shown in Figure 197. Note that the percussion center was assumed to have zero longitudinal velocity in the direction of the vehicle after the sign support fractured; as a result, the equations and variables for Method 1 were slightly modified for the difference in effective center of rotation.

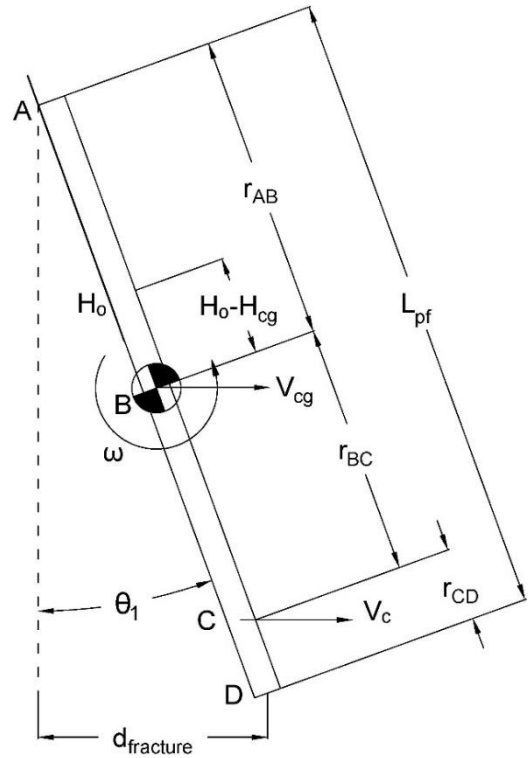

Figure 197. Sign Support Orientation at Fracture (Method 2)

H_O = location of percussion center
$H_O - H_{c.g.}$ = distance from percussion center to fractured sign support c.g.

The modified equations for the angular velocity and longitudinal c.g. velocity are written in equation nos. 7 and 8, respectively.

$$\omega = \frac{(1+C)*V_{vehicle}}{(H_o - H_{cg} + r_{BC})*\cos(\theta_1)} \qquad (7)$$

$$V_{c.g.,x} = \omega * (H_o - H_{cg}) * \cos(\theta_1) \qquad (8)$$

Equation nos. 7 and 8 were then rewritten as shown in equation nos. 9 and 10 to solve for the COR and H_o.

$$COR = \frac{V_{cg} + \omega * \cos(\theta_1) * (r_{bc})}{V_{vehicle}} - 1 \qquad (9)$$

$$H_o = \frac{(1+C)*V_{vehicle}}{\omega*\cos(\theta_1)} + H_{contact} \qquad (10)$$

Where $H_{contact}$ is the height measured from the ground line to the vehicle's point of contact on the sign support at time of initial impact.

First, test results were utilized to identify the range of calculated COR and percussion center heights. Results of the empirical analysis using Method 2 are shown in Table 39.

Table 39. Method 2 Calculated COR and H_o

Test Name	UCSS-1c	UCSS-4	UCSS-6	UCSS-8	UCSS-10
Height of Bottom of Sign Panel in.	60	60	84	84	60
Height of Top of Sign Support in.	92	92	116	116	92
Calculated COR	0.045	0.078	0.158	0.091	0.083
Calculated H_o in.	74.3	82.6	90.7	92.1	74.6

Similar to Method 1, the calculated parameters were averaged, resulting in an average COR of 0.091, an average H_o of 77.2 in. for a 5-ft tall installation, and an average H_o of 91.4 in. for a 7-ft tall installation. Each of the physical tests were re-evaluated with the averaged values of the COR and H_o. The resulting angular velocities and secondary impact locations are presented in Tables 40 and 41.

Table 40. Method 2 Angular Velocity with Average COR and H_o

Test Name	UCSS-1c	UCSS-4	UCSS-6	UCSS-8	UCSS-10
Model-Predicted Angular Velocity rad/s	20.5	22.4	17.6	18.0	22.5
Actual Angular Velocity rad/s	20.7	20.1	18.9	17.8	23.4
Difference	-0.2	2.3	-1.3	0.2	-0.9
% Error	-1.0	11.4	-6.9	1.1	-3.8

Table 41. Method 2 Secondary Impact Location with Average COR and H_o

Test Name	UCSS-1c	UCSS-4	UCSS-6	UCSS-8	UCSS-10
Model-Predicted Roof Contact Location in.	18.1	13.0	54.8	64.5	16.0
Actual Roof Contact Location in.	34.2	12.2	51.2	62.2	23.8
Difference	-16.1	0.8	3.6	2.3	-7.8
% Error	-47.1	6.6	7.0	3.7	-32.8

When evaluated with the averaged COR and H_o, the model exhibited a reasonable correlation with the physical test results. The angular velocities were within 2.3 rad/s with a maximum error of 11.4 percent. Because angular velocity is likely to be strongly-related to roof deformation, results are deemed very reasonable.

Estimating the point of contact between the sign support and the roof was less accurate overall. The largest deviation in the secondary impact location was 16.1 in. longitudinally, or 47.1 percent. However, test no. UCSS-1c utilized a 2009 Toyota Yaris and the remaining UCSS tests utilized a 2012 Kia Rio. Thus, some error is likely attributed to the difference in vehicle geometry. The remaining calculated secondary impact locations were within 8.0 in. of the physical test results. Although this is partially attributable to the small dataset for evaluation, the model results suggest that while the location of sign support contact with the vehicle may vary from the model, the overall sign support reaction is reasonably predictable using the mathematical model presented.

Lastly, it is worth noting that for each of the tests, the location of the actual point of fracture relative to the initial height of the sign was used. When using the simplified model, an estimate for the fracture height is required, which may not be known prior to conducting a test. Thus, this parameter was made to be adjustable for end users to vary in order to investigate how different fracture locations could affect sign support behaviors. From test results, fractures were generally close to the stub height for posts with foundation stub posts, but varied for direct-embedment posts. Even during tests in which both a Kia Rio and Toyota Yaris were used with similar overall behaviors, the fracture locations of the signs varied slightly due to material properties, and some sign supports fractured in multiple locations. Thus, some variability in test results and model results is anticipated.

13.3 MASH 2270P Sign Behavior Estimate

The mathematical model was used to estimate the behavior of two sign installations when impacted by the MASH 2270P test vehicle at 62 mph. Estimates were calculated for a sign installation with a 5-ft sign mounting height and a sign installation with a 7-ft sign mounting height. Each calibration method was used, resulting in a total of four estimates, two for each installation.

For each estimate, it was assumed that the sign would fracture at 15⅞ in. above the ground line, which corresponded to the lower bumper height of the vehicle. Additionally, it was assumed

that the sign support would fracture after 6 in. of displacement at the point of contact with the bumper. However, the pivot point (C) was selected as the leading edge of the engine hood, not at the bumper location. This adjustment was made because sign support testing from other efforts using alternative post supports frequently contacted and rebounded off of the leading edge of the vehicle's hood. The estimates completed using Method 1 utilized a COR of 0.43 and a correction factor of 60 percent. The estimates completed using Method 2 utilized a COR of 0.091, an H_o of 77.2 in. for the 5-ft tall installation, and an H_o of 91.4 in. for the 7-ft tall installation. The estimated angular velocities and secondary impact locations for each sign installation are presented in Tables 42 and 43.

Table 42. MASH 2270P 5-ft Tall Sign Behavior Estimate

Calibration Method	Method 1	Method 2
Angular Velocity Rad/s	34.4	38.9
Secondary Impact Location in.	-29.7	-37.9

Table 43. MASH 2270P 7-ft Tall Sign Behavior Estimate

Calibration Method	Method 1	Method 2
Angular Velocity Rad/s	22.5	26.6
Secondary Impact Location in.	11.0	-0.9

The model predicted that the secondary impact location with the 5-ft tall installation would occur at a negative displacement relative to the leading top edge of the windshield. Note that a negative displacement indicates that the sign panel would likely rotate into the windshield of the test vehicle. For the 7-ft sign support (system evaluated during test nos. UCSS-1c, UCSS-4, and UCSS-7), the model predicted that the sign panel would contact the vehicle very close to the leading front edge of the windshield, ether at the windshield or on the roof.

Due to the better performance of the model using Method 2 during calibration, the results of method using Model 2 were believed to be more accurate. However, both methods provided similar estimates of the angular velocity of the sign support and reasonably similar estimates of the contact location with the 2270P test vehicle.

13.4 Conclusions and Recommendations

A predictive model was developed to estimate the interaction between a sign support and the 2270P pickup truck based on the results of the small car testing. The model results compared well with the small car empirical test results, but they have not yet been validated using tests of the single, U-channel sign support with a 2270P impact. Should testing be conducted with the sign support systems evaluated during this research effort or with sign supports which behave similarly to the U-channel supports, further evaluation of the accuracy of this model is recommended.

Limited testing has been conducted on sign supports using 2270P pickup trucks according to MASH test designation no. 3-62 criteria. However, some recent testing has demonstrated failure of the 2270P vehicle impacting U-channel and perforated steel square tube (PSST) sign supports, as tests have indicated the propensity for test articles to contact the windshield [15]. Other tests with breakaway and work-zone hardware have also performed poorly with the 2270P vehicle [16]. Therefore, full-scale testing of the single, U-channel sign supports evaluated in this study should be conducted with the 2270P pickup truck vehicle in accordance with MASH test designation no. 3-62 in order to be determined to be acceptable according to MASH evaluation criteria. If properly tuned and verified, the mathematical model shown in this research study could provide an indication if there is a risk of contact between a sign support and a 2270P test vehicle, and may be useful for considering if the 2270P vehicle test condition could be waived if no sign support contact with the windshield, roof, or cab is expected. However, such a determination would depend on having calibrated results and a series of successful correlations of the mathematical model with full-scale test results.

14 SUMMARY, CONCLUSIONS, AND RECOMMENDATIONS

14.1 Summary

The objective of this research project was to evaluate the crashworthiness of various break away sign systems mounted on single, U-channel sign supports in accordance with impact conditions consistent with TL-3 criteria of MASH 2016. The evaluated breakaway sign support systems were identified as critical during the Phase Ia report based on sign panel mounting height, sign panel size, post weight, post material properties, and post splice configuration [6]. Additionally, to evaluate the crashworthiness of the various breakaway sign systems, a surrogate, reusable, 1100C test vehicle was developed and validated, which replicated the stiffness, dynamics, and geometry of a MASH 1100C small car test vehicle. Concepts for developing a 2270P surrogate test vehicle were explored, but only testing with the surrogate, reusable, 1100C test vehicle was completed due to cost and time constraints. Additionally, a dynamic sign behavior analysis was performed to estimate the behavior of sign installations when impacted by the MASH 2270P test vehicle.

All dynamic testing that was conducted during this research effort utilized a surrogate, reusable, 1100C test vehicle, which was developed by reinforcing and modifying a 2012 Kia Rio small car vehicle. The reinforcements were intended to protect critical and sensitive equipment, including brake and fuel lines, from undercarriage contacts. Although all original equipment manufacturer (OEM) components for the bumper, bumper cartridge, hood, and windshield were used, the mounting methods for those components were modified to expedite replacement. The surrogate, reusable, 1100C test vehicle behaviors were compared to full-scale test results from test no. UCSS-1, systems 1, 2, and 3. The results were determined to be comparable, although differences resulting from materials were observed.

A total of ten crash tests with the surrogate, reusable, 1100C test vehicle were conducted on single U-channel sign support installations. Test nos. UCSS-5 and UCSS-7 were conducted according to MASH 2016 test designation no. 3-60. Test nos. UCSS-2 through UCSS-4, UCSS-6, and UCSS-8 through UCSS-11 were conducted according to MASH 2016 test designation no. 3-61. All test results are presented in Table 44 and are summarized in the subsequent paragraphs. Additional test summaries are presented in Appendix L.

Table 44. Testing Summary

Test Name	MASH Test Designation No.*	Impact Velocity mph	Type	Mounting Height ft	Sign Dimension in.	Potential Pass/Fail	Notes
UCSS-2	3-61	63.6	DE	4	12 x 36	Pass	-
UCSS-3	3-61	62.4	LS	7	36 x 36	Pass	-
UCSS-4	3-61	62.4	LS	5	36 x 36	Pass	-
UCSS-5	3-60	20.4	DE	7	36 x 36	Pass	2.8 in. windshield deformation
UCSS-6	3-61	62.5	DE	7	36 x 36	Pass	3.8 in. roof deformation
UCSS-7	3-60	19.8	LS	5	36 x 36	Pass	-
UCSS-8	3-61	63.1	LS	7	36 x 36	Fail	Rear windshield penetration
UCSS-9	3-61	63.8	DE	4	3 x 6	Pass	-
UCSS-10	3-61	62.4	DE	5	36 x 36	Pass	-
UCSS-11	3-61	61.1	LS	7	36 x 36	Fail	Rear windshield penetration

*All tests were representative MASH tests and the results show an anticipated pass or fail
DE = Direct Embedment; LS = Upper sign support connected to anchor stub with Lap Splice
All impacts occurred with a 0-degree angle configuration of the sign support with respect to vehicle.

In test no. UCSS-2, the 2,432-lb surrogate, reusable, 1100C test vehicle impacted the single, U-channel sign support installation at a speed of 63.6 mph and at an angle of 0 degrees, thus resulting in a kinetic energy of 329.1 kip-ft. Impact occurred at the centerline of the surrogate vehicle's front bumper. The analysis of the test results showed that the system readily activated in a predictable manner when impacted by the surrogate, reusable, 1100C test vehicle, with minor damage to the vehicle bumper, hood, and windshield. Additional damage was caused to the right-front wheel assembly due to a secondary impact with a temporary barrier downstream of the installation. All vehicle decelerations, ORAs, OIVs, and occupant compartment deformations fell within the recommended safety limits established in MASH 2016. Therefore, test no. UCSS-2 was anticipated to be acceptable according to the MASH 2016 safety performance criteria for test designation no. 3-61.

In test no. UCSS-3, the 2,432-lb surrogate, reusable, 1100C test vehicle impacted the single, U-channel sign support installation at a speed of 62.4 mph and at an angle of 0 degrees, thus resulting in a kinetic energy of 316.2 kip-ft. Impact occurred on the right quarter point of the surrogate vehicle's front bumper. The analysis of the test results showed that the system readily activated in a predictable manner when impacted by the surrogate, reusable, 1100C test vehicle, with minor damage to the vehicle bumper and roof. All vehicle decelerations, ORAs, OIVs, and occupant compartment deformations fell within the recommended safety limits established in

MASH 2016. Therefore, test no. UCSS-3 was anticipated to be acceptable according to the MASH 2016 safety performance criteria for test designation no. 3-61.

In test no. UCSS-4, the 2,432-lb surrogate, reusable, 1100C test vehicle impacted the single, U-channel sign support installation at a speed of 62.4 mph and at an angle of 0 degrees, thus resulting in a kinetic energy of 316.2 kip-ft. Impact occurred on the right quarter point of the surrogate vehicle's front bumper. The analysis of the test results showed that the system readily activated in a predictable manner when impacted by the surrogate, reusable, 1100C test vehicle, with minor damage to the vehicle bumper, windshield, and roof. All vehicle decelerations, ORAs, OIVs, and occupant compartment deformations fell within the recommended safety limits established in MASH 2016. Therefore, test no. UCSS-4 was anticipated to be acceptable according to the MASH 2016 safety performance criteria for test designation no. 3-61.

In test no. UCSS-5, the 2,408-lb surrogate, reusable, 1100C test vehicle impacted the single, U-channel sign support installation at a speed of 20.4 mph and at an angle of 0 degrees, thus resulting in a kinetic energy of 33.7 kip-ft. Impact occurred at the centerline of the surrogate vehicle's front bumper. The analysis of the test results showed that the system readily activated in a predictable manner when impacted by the surrogate, reusable, 1100C test vehicle, with minor damage to the vehicle bumper and windshield. All vehicle decelerations, ORAs, OIVs, and occupant compartment deformations fell within the recommended safety limits established in MASH 2016. Therefore, test no. UCSS-5 was anticipated to be acceptable according to the MASH 2016 safety performance criteria for test designation no. 3-60.

In test no. UCSS-6, the 2,408-lb surrogate, reusable, 1100C test vehicle impacted the single, U-channel sign support installation at a speed of 62.5 mph and at an angle of 0 degrees, thus resulting in a kinetic energy of 315.7 kip-ft. Impact occurred at the centerline of the surrogate vehicle's front bumper. The analysis of the test results showed that the system readily activated in a predictable manner when impacted by the surrogate, reusable, 1100C test vehicle, with damage to the vehicle bumper, rear windshield, and roof. All vehicle decelerations, ORAs, OIVs, and occupant compartment deformations fell within the recommended safety limits established in MASH 2016. Therefore, test no. UCSS-6 was anticipated to be acceptable according to the MASH 2016 safety performance criteria for test designation no. 3-61.

In test no. UCSS-7, the 2,408-lb surrogate, reusable, 1100C test vehicle impacted the single, U-channel sign support installation at a speed of 19.8 mph and at an angle of 0 degrees, thus resulting in a kinetic energy of 31.6 kip-ft. Impact occurred at the centerline of the surrogate vehicle's front bumper. The analysis of the test results showed that the system readily activated in a predictable manner when impacted by the surrogate, reusable, 1100C test vehicle, with minor damage to the vehicle bumper and windshield. All vehicle decelerations, ORAs, OIVs, and occupant compartment deformations fell within the recommended safety limits established in MASH 2016. Therefore, test no. UCSS-7 was anticipated to be acceptable according to the MASH 2016 safety performance criteria for test designation no. 3-60.

In test no. UCSS-8, the 2,408-lb surrogate, reusable, 1100C test vehicle impacted the single, U-channel sign support installation at a speed of 63.1 mph and at an angle of 0 degrees, thus resulting in a kinetic energy of 320.8 kip-ft. Impact occurred at the centerline of the surrogate vehicle's front bumper. The analysis of the test results showed that the system readily activated in a predictable manner when impacted by the surrogate, reusable, 1100C test vehicle, with damage

to the vehicle bumper, rear windshield, and roof. All vehicle decelerations, ORAs, and OIVs fell within the recommended safety limits established in MASH 2016. However, the sign panel penetrated the rear windshield and entered the occupant compartment during the test. Therefore, test no. UCSS-8 was anticipated to be unacceptable according to the MASH 2016 safety performance criteria for test designation no. 3-61.

In test no. UCSS-9, the 2,408-lb surrogate, reusable, 1100C test vehicle impacted the single, U-channel sign support installation at a speed of 63.8 mph and at an angle of 0 degrees, thus resulting in a kinetic energy of 329.6 kip-ft. Impact occurred at the centerline of the surrogate vehicle's front bumper. The analysis of the test results showed that the system readily activated in a predictable manner when impacted by the surrogate, reusable, 1100C test vehicle, with minor damage to the vehicle bumper. All vehicle decelerations, ORAs, OIVs, and occupant compartment deformations fell within the recommended safety limits established in MASH 2016. Therefore, test no. UCSS-9 was anticipated to be acceptable according to the MASH 2016 safety performance criteria for test designation no. 3-61.

In test no. UCSS-10, the 2,408-lb surrogate, reusable, 1100C test vehicle impacted the single, U-channel sign support installation at a speed of 62.4 mph and at an angle of 0 degrees, thus resulting in a kinetic energy of 314.7 kip-ft. Impact occurred at the centerline of the surrogate vehicle's front bumper. The analysis of the test results showed that the system readily activated in a predictable manner when impacted by the surrogate, reusable, 1100C test vehicle, with minor damage to the vehicle bumper and roof. All vehicle decelerations, ORAs, OIVs, and occupant compartment deformations fell within the recommended safety limits established in MASH 2016. Therefore, test no. UCSS-10 was anticipated to be acceptable according to the MASH 2016 safety performance criteria for test designation no. 3-61.

In test no. UCSS-11, the 2,408-lb surrogate, reusable, 1100C test vehicle impacted the single, U-channel sign support installation at a speed of 61.1 mph and at an angle of 0 degrees, thus resulting in a kinetic energy of 301.8 kip-ft. Impact occurred at the centerline of the surrogate vehicle's front bumper. The analysis of the test results showed that the system readily activated in a predictable manner when impacted by the surrogate, reusable, 1100C test vehicle, with moderate damage to the vehicle bumper, hood, rear windshield, and roof. All vehicle decelerations, ORAs, OIVs, and occupant compartment deformations fell within the recommended safety limits established in MASH 2016. However, the sign panel penetrated the rear windshield and entered the occupant compartment during the test. Therefore, test no. UCSS-11 was anticipated to be unacceptable according to the MASH 2016 safety performance criteria for test designation no. 3-61. A summary of each test evaluation is shown in Tables 45 through 48.

Table 45. Summary of Safety Performance Evaluation, Test Nos. UCSS-2 through UCSS-4

Evaluation Factors	Evaluation Criteria	Test No. UCSS-2	Test No. UCSS-3	Test No. UCSS-4
Structural Adequacy	B. The test article should readily activate in a predictable manner by breaking away, fracturing, or yielding.	S	S	S
Occupant Risk	D. 1. Detached elements, fragments or other debris from the test article should not penetrate or show potential for penetrating the occupant compartment, or present an undue hazard to other traffic, pedestrians, or personnel in a work zone.	S	S	S
	2. Deformations of, or intrusions into, the occupant compartment should not exceed limits set forth in Section 5.2.2 and Appendix E of MASH 2016.	S	S	S
	F. The vehicle should remain upright during and after collision. The maximum roll and pitch angles are not to exceed 75 degrees.	S	S	S
	H. Occupant Impact Velocity (OIV) (see Appendix A, Section A5.2.2 of MASH 2016 for calculation procedure) should satisfy the following limits:	S	S	S
	Occupant Impact Velocity Limits			
	Component: Longitudinal and Lateral — Preferred: 10 ft/s — Maximum: 16 ft/s			
	I. The Occupant Ridedown Acceleration (ORA) (see Appendix A, Section A5.2.2 of MASH 2016 for calculation procedure) should satisfy the following limits:	NA	NA	NA
	Occupant Ridedown Acceleration Limits			
	Component: Longitudinal and Lateral — Preferred: 15.0 g's — Maximum: 20.49 g's			
Post-Impact Vehicular Response	N. Vehicle trajectory behind the test article is acceptable.	S	S	S
MASH 2016 Test Designation No.		3-61	3-61	3-61
*Recommended Final Evaluation (Pass or Fail)		Pass	Pass	Pass

S – Satisfactory U – Unsatisfactory NA - Not Applicable

*These results are anticipated based on non-certified MASH testing using a reusable, surrogate 1100 vehicle

Table 46. Summary of Safety Performance Evaluation, Test Nos. UCSS-5 through UCSS-7

Evaluation Factors	Evaluation Criteria	Test No. UCSS-5	Test No. UCSS-6	Test No. UCSS-7
Structural Adequacy	B. The test article should readily activate in a predictable manner by breaking away, fracturing, or yielding.	S	S	S
Occupant Risk	D. 1. Detached elements, fragments or other debris from the test article should not penetrate or show potential for penetrating the occupant compartment, or present an undue hazard to other traffic, pedestrians, or personnel in a work zone.	S	S	S
	2. Deformations of, or intrusions into, the occupant compartment should not exceed limits set forth in Section 5.2.2 and Appendix E of MASH 2016.	S	S	S
	F. The vehicle should remain upright during and after collision. The maximum roll and pitch angles are not to exceed 75 degrees.	S	S	S
	H. Occupant Impact Velocity (OIV) (see Appendix A, Section A5.2.2 of MASH 2016 for calculation procedure) should satisfy the following limits:	S	S	S
	Occupant Impact Velocity Limits			
	Component: Longitudinal and Lateral — Preferred: 10 ft/s — Maximum: 16 ft/s			
	I. The Occupant Ridedown Acceleration (ORA) (see Appendix A, Section A5.2.2 of MASH 2016 for calculation procedure) should satisfy the following limits:	NA	NA	NA
	Occupant Ridedown Acceleration Limits			
	Component: Longitudinal and Lateral — Preferred: 15.0 g's — Maximum: 20.49 g's			
Post-Impact Vehicular Response	N. Vehicle trajectory behind the test article is acceptable.	S	S	S
MASH 2016 Test Designation No.		3-60	3-61	3-60
*Recommended Final Evaluation (Pass or Fail)		Pass	Pass	Pass

S – Satisfactory U – Unsatisfactory NA - Not Applicable IND - Indeterminate

*These results are anticipated based on non-certified MASH testing using a reusable, surrogate 1100 vehicle

Table 47. Summary of Safety Performance Evaluation, Test Nos. UCSS-8 through UCSS-10

Evaluation Factors	Evaluation Criteria	Test No. UCSS-8	Test No. UCSS-9	Test No. UCSS-10
Structural Adequacy	B. The test article should readily activate in a predictable manner by breaking away, fracturing, or yielding.	S	S	S
Occupant Risk	D. 1. Detached elements, fragments or other debris from the test article should not penetrate or show potential for penetrating the occupant compartment, or present an undue hazard to other traffic, pedestrians, or personnel in a work zone.	S	S	S
	2. Deformations of, or intrusions into, the occupant compartment should not exceed limits set forth in Section 5.2.2 and Appendix E of MASH 2016.	U	S	S
	F. The vehicle should remain upright during and after collision. The maximum roll and pitch angles are not to exceed 75 degrees.	S	S	S
	H. Occupant Impact Velocity (OIV) (see Appendix A, Section A5.2.2 of MASH 2016 for calculation procedure) should satisfy the following limits:	S	S	S
	I. The Occupant Ridedown Acceleration (ORA) (see Appendix A, Section A5.2.2 of MASH 2016 for calculation procedure) should satisfy the following limits:	NA	NA	NA
Post-Impact Vehicular Response	N. Vehicle trajectory behind the test article is acceptable.	S	S	S
MASH 2016 Test Designation No.		3-61	3-61	3-61
*Recommended Final Evaluation (Pass or Fail)		Fail	Pass	Pass

Occupant Impact Velocity Limits

Component	Preferred	Maximum
Longitudinal and Lateral	10 ft/s	16 ft/s

Occupant Ridedown Acceleration Limits

Component	Preferred	Maximum
Longitudinal and Lateral	15.0 g's	20.49 g's

S – Satisfactory U – Unsatisfactory NA - Not Applicable

*These results are anticipated based on non-certified MASH testing using a reusable, surrogate 1100 vehicle

Table 48. Summary of Safety Performance Evaluation, Test No. UCSS-11

Evaluation Factors	Evaluation Criteria	Test No. UCSS-11
Structural Adequacy	B. The test article should readily activate in a predictable manner by breaking away, fracturing, or yielding.	S
Occupant Risk	D. 1. Detached elements, fragments or other debris from the test article should not penetrate or show potential for penetrating the occupant compartment, or present an undue hazard to other traffic, pedestrians, or personnel in a work zone.	S
	2. Deformations of, or intrusions into, the occupant compartment should not exceed limits set forth in Section 5.2.2 and Appendix E of MASH 2016.	U
	F. The vehicle should remain upright during and after collision. The maximum roll and pitch angles are not to exceed 75 degrees.	S
	H. Occupant Impact Velocity (OIV) (see Appendix A, Section A5.2.2 of MASH 2016 for calculation procedure) should satisfy the following limits:	S
	Occupant Impact Velocity Limits	
	Component: Longitudinal and Lateral; Preferred: 10 ft/s; Maximum: 16 ft/s	
	I. The Occupant Ridedown Acceleration (ORA) (see Appendix A, Section A5.2.2 of MASH 2016 for calculation procedure) should satisfy the following limits:	NA
	Occupant Ridedown Acceleration Limits	
	Component: Longitudinal and Lateral; Preferred: 15.0 g's; Maximum: 20.49 g's	
Post-Impact Vehicular Response	N. Vehicle trajectory behind the test article is acceptable.	S
MASH 2016 Test Designation No.		3-61
*Recommended Final Evaluation (Pass or Fail)		Fail

S – Satisfactory U – Unsatisfactory NA - Not Applicable

*These results are anticipated based on non-certified MASH testing using a reusable, surrogate 1100 vehicle

It should be noted that MASH does not currently accept surrogate bogie vehicle test results in lieu of full-scale MASH crash tests. The research completed during this research study is therefore not yet considered MASH-compliant. However, the modifications completed to the surrogate, reusable test vehicle during this research effort did not alter the stiffness, geometry, nor dynamics of the test vehicle, and components in the bumper and bumper shroud were consistent with original equipment manufacturer (OEM) specifications for connections, assembly, and vehicle model requirements. If further evidence is presented which can confirm that the reaction of the surrogate, reusable test vehicle utilized in this study is consistent with the behavior of the MASH 1100C small car vehicle, test results may be accepted according to MASH evaluation criteria.

In addition to the surrogate vehicle testing of the single U-channel sign support installations, a dynamic sign behavior analysis was performed to develop a mathematical model to estimate the time, angular velocity, and location of secondary contact between the top of a sign panel and the impacting vehicle. Two different calibration methods were evaluated for the model with physical test results. Although both methods provided similar overall estimates for contact location and sign support rotational speed, the preferred method utilized a percussion center estimate.

14.2 Sign Support Stub Heights

Due to the propensity for sign support stub heights to contact the vehicle undercarriage or contribute to vehicle instability, the stub heights for breakaway sign supports are often recorded after a full-scale crash test. A summary of the sign support stub heights for all tests shown in this research effort is shown in Table 49. Images of the stub heights are shown in Figures 198 through 203.

Table 49. Summary of Stub Heights, Test Nos. UCSS-2 through UCSS-11

Test No.	Sign Support Configuration	Post Specifications	Stub Height After Test
UCSS-2	Direct Embedment	1.12 lb/ft Gr 60	18 in.
UCSS-3	Lap Splice	4 lb/ft Gr 60	4 in.
UCSS-4	Lap Splice	4 lb/ft Gr 60	4 in.
UCSS-5	Direct Embedment	4 lb/ft Gr 80	15 in.
UCSS-6	Direct Embedment	4 lb/ft Gr 80	10 in.
UCSS-7	Lap Splice	4 lb/ft Gr 60	4 in.
UCSS-8	Lap Splice	3 lb/ft Gr 60	4 in.
UCSS-9	Direct Embedment	1.12 lb/ft Gr 60	4 in.
UCSS-10	Direct Embedment	4 lb/ft Gr 80	0 in.
UCSS-11	Lap Splice	4 lb/ft Gr 80	11 in.

Figure 198. 18-in. Stub Height for Test No. UCSS-2

Figure 199. 4-in. Stub Height for Test No. UCSS-3 (typical for all lap splice systems)

Figure 200. 15-in. Stub Height for Test No. UCSS-5

Figure 201. 10-in. Stub Height for Test No. UCSS-6

Figure 202. 0-in. Stub Height for Test No. UCSS-9

Figure 203. 11-in. Stub Height for Test No. UCSS-10

14.3 Conclusions and Recommendations

The safety performance of the single, U-channel, breakaway sign supports during impact with the surrogate, reusable, 1100C test vehicle was believed to be representative of impacts with a MASH-compliant 1100C small car vehicle in accordance with MASH test conditions 3-60 and 3-61. Most other MASH evaluation criteria were satisfied during test nos. UCSS-2, 3, 4, 5, 6, 7, 9, and 10. Limitations to the MASH eligibility of results included the age of the vehicle, the repaired roof, and soil strengths not measured prior to each surrogate vehicle test. However, to be considered crashworthy according to FHWA eligibility criteria, all MASH full-scale crash tests must be conducted on each system evaluated. No full-scale testing was conducted with the 2270P vehicle according to MASH test designation no. 3-62 in this project. In addition, no investigation was made to determine if alternative impact angles other than a traditional 0-degree impact angle were more critical according to the MASH evaluation criteria.

Therefore, further evaluation is recommended before the results of the dynamic impact testing performed in this study are determined to be valid indicators of small car behavior under MASH test designation nos. 3-60 and 3-61. It is first recommended that validated computer simulation models of the single, U-channel, breakaway sign supports be developed based results from the crash tests performed in this effort. Calibrated and validated models can be used to explore the effect of alternative sign panel sizes and thicknesses, impact angles, auxiliary hardware including lights, flags, and sign support lateral stiffening structures, and predict full-scale crash test performance with the 2270P pickup truck. Simulation analysis will be used to determine if the performance of the single, U-channel, breakaway sign supports evaluated during this study were investigated in a critical impact angle and configuration.

Results from tests conducted with the surrogate, reusable, 1100C test vehicle developed in this study were subject to the following limitations:

- Undercarriage contact did not occur or was deemed sufficiently minor as to not result in undercarriage perforation, penetration, or gouging.

- Standard OEM vehicle components hardware were used to ensure test article contact with the vehicle would be representative of an unmodified, pristine test vehicle. For each impact, damage to vehicle components was evaluated and if deformations exceeded ¼ in. of permanent displacement, the vehicle component was either replaced or repaired. Standard OEM equipment was used for the bumper shroud, bumper cartridge, hood, front windshield, and rear window components.

- The surrogate, reusable, vehicle utilized clamps to secure the front windshield and rear window to the vehicle body. Note that unmodified vehicles typically use adhesives to anchor the front windshield and rear window in place. The lack of continuously-bonded interface with the vehicle structure likely reduced the overall strength of the front windshield and rear window, leading to a more critical evaluation and increased likelihood for glass damage, deformation, or penetration. Nonetheless, none of the test article contact with the windshield was determined to violate the deflection criteria established in MASH.

- Significant, non-repairable structural damage did not occur, which could compromise vehicle behavior, geometry, or interaction with test articles. Some roof contact occurred

during testing, resulting in plastic roof deformations. The deformations were measured and recorded using LIDAR maps before the roof was repaired to near-pristine condition. Following roof repairs, a new "baseline" vehicle scan was performed to confirm the geometry of the roof did not vary from the unmodified roof scans collected before the conversion of the 2012 Kia Rio into the surrogate, reusable, 1100C test vehicle. Furthermore, no damage was permitted to the bumper load plate, frame tubes or frame horns, suspension, "A," "B," or "C" pillars, or wheel alignments during any tests. Note that during test no. UCSS-11, structural damage did occur to the bumper load beam, and the surrogate, reusable, 1100C test vehicle was not repaired for further testing. However, the methods used when developing this surrogate vehicle maybe applied to future iterations of the surrogate vehicle.

In recognition of these limitations and previous discussion of the vehicle year and replaced components, the behavior of the surrogate, reusable, 1100C test vehicle was believed to be representative of the MASH small car. However, according to the current criteria provided in MASH, test results cannot be accepted as substitutes for full-scale compliance testing. Further research may be required to confirm that test results observed in this test series can be recommended in lieu of performing subsequent full-scale testing with unmodified, MASH-compliant 1100C small car vehicles.

In addition to improved simulation analysis, additional investigation of the simplified parametric estimation tool evaluated in this study is also recommended. If validated, this tool may provide preliminary guidance for critical test configurations without requiring a detailed computer simulation effort.

15 REFERENCES

1. *Manual for Assessing Safety Hardware (MASH), Second Edition*, American Association of State Highway and Transportation Officials (AASHTO), Washington, D.C., 2016.

2. *Standard Specifications for Structural Supports for Highway Signs, Luminaries, and Traffic Signals*, American Association of State Highway and Transportation Officials (AASHTO), Washington, D.C., 1985.

3. Michie, J.D., *Recommended Procedures for the Safety Performance Evaluation of Highway Appurtenances*, National Cooperative Highway Research Program (NCHRP) Report No. 230, Transportation Research Board, Washington, D.C., March 1981.

4. Ross, H.E., Sicking, D.L., Zimmer, R.A., and Michie, J.D., *NCHRP Report 350: Recommended Procedures for the Safety Performance Evaluation of Highway Features*, TRB, National Research Council, Washington, D.C., 1993.

5. Marzougui, D. et al, *NCHRP Project 03-119: Application of MASH Test Criteria to Breakaway Sign and Luminaire Supports and Crashworthy Work-Zone Traffic Control Devices*, Phase I Interim Report, George Mason University, 2019.

6. Rasmussen, J.D., Faller, R.K., Lechtenberg, K.A., Bielenberg, R.W., Dowler, N., Bayingana, A., and Markvicka, C., *MASH Full-Scale Testing of Single-Post, U-Channel Sign Supports*, Report No. TRP-03-440-20, Midwest Roadside Safety Facility, University of Nebraska-Lincoln, Lincoln, Nebraska, December 17, 2020.

7. *Expert Autostats*, 4N6XPRT Systems, La Mesa, California, 2019.

8. 2012 Kia Rio, Hum3D Models, Downloaded 2019.

9. Ross, H.E., Sicking, D.L., Zimmer, R.A., and Michie, J.D., *Recommended Procedures for the Safety Performance Evaluation of Highway Features*, National Cooperative Highway Research Program (NCHRP) Report 350, Transportation Research Board, Washington, D.C., 1993.

10. *Axle-Less Trailer Suspension*, Timbren Products, Accessed February 2020. https://timbren.com/axle-less/

11. Hinch, J., Yang, T.L., and Owings, R., *Guidance Systems for Vehicle Testing*, ENSCO, Inc., Springfield, Virginia, 1986.

12. MacInnis, D., Cliff, W., and Ising, K., *A Comparison of the Moment of Inertia Estimation Techniques for Vehicle Dynamics Simulation*, SAE Technical Paper Series – 970951, Society of Automotive Engineers, Inc., Warrendale, Pennsylvania, 1997.

13. Society of Automotive Engineers (SAE), *Instrumentation for Impact Test – Part 1 – Electronic Instrumentation*, SAE J211/1 MAR95, New York City, New York, July 2007.

14. "Clarifications on Implementing the AASHTO Manual for Assessing Safety Hardware, 2016", American Association of State Highway and Transportation Officials, May 2018.

15. Bullard, Jr., D.L., Bligh, R.P., Menges, W.L., and Haug, R.R., *NCHRP Web-Only Document 157*, "Volume I: Evaluation of Existing Roadside Safety Hardware Using Updated Criteria – Technical Report", National Cooperative Highway Research Program (NCHRP) Final Report for Project 22-14(03), Texas Transportation Institute, College Station, Texas, March 2010.

16. Schmidt (Rasmussen), J.D., and Sicking, D.L., "Analysis of Existing Work-Zone Sign Supports using MASH Safety Performance Criteria", *Journal of Transportation Safety and Security*, Vol 3 No. 4, pp. 237-251, November 2011. DOI: 10.1080/19439962.2011.599015

17. Schmidt (Rasmussen), J.D., Faller, R.K., Lechtenberg, K.A., and Sicking, D.L., *Analysis of the Existing Work-Zone Devices with MASH Safety Performance Criteria*, Master's Thesis, University of Nebraska-Lincoln, December 2009.

16 APPENDICES

Appendix A. Vehicle Center of Gravity Determination

		Test Name:	Ucss	VIN:	knadm4a38c6085061
Model Year:	2012	Make:	Kia	Model:	Rio

Vehicle CG Determination

	Vehicle Equipment	Weight (lb)
+	Unballasted Car (Curb)	2480
+	Hub	19
+	Brake activation cylinder & frame	7
+	Pneumatic tank (Nitrogen)	22
+	Strobe/Brake Battery	5
+	Brake Receiver/Wires	5
+	CG Plate including DAQ	17
-	Battery	-31
-	Oil	-7
-	Interior	-56
-	Fuel	-54
-	Coolant	-7
-	Washer fluid	-4
+	Water Ballast (In Fuel Tank)	
+	Onboard Supplemental Battery	
+	Spare tire	18
+	Metal brake line protection	25

Note: (+) is added equipment to vehicle, (-) is removed equipment from vehicle

Estimated Total Weight (lb) 2439

Vehicle Dimensions for C.G. Calculations

Wheel Base:	101.0	in.	Front Track Width:	59.875	in.
Roof Height:	57.75	in.	Rear Track Width:	59.875	in.

Center of Gravity	1100C MASH Targets	Test Inertial	Difference
Test Inertial Weight (lb)	2420 ± 55	2432	12.0
Longitudinal CG (in.)	39 ± 4	40.325	1.325
Lateral CG (in.)	NA	0.566	NA
Vertical CG (in.)	NA	22.425	NA

Note: Long. CG is measured from front axle of test vehicle

Note: Lateral CG measured from centerline - positive to vehicle right (passenger) side

CURB WEIGHT (lb)

	Left	Right
Front	778	731
Rear	476	495

FRONT	1509	lb
REAR	971	lb
TOTAL	2480	lb

TEST INERTIAL WEIGHT (lb)

	Left	Right
Front	708	753
Rear	485	486

FRONT	1461	lb
REAR	971	lb
TOTAL	2432	lb

Figure A-1. Vehicle Mass Distribution for Surrogate, Reusable, 1100C Test Vehicle

Appendix B. Test No. UCSS-2 Material Specifications

Table B-1. Bill of Materials, Test No. UCSS-2

Item No.	Description	Material Specification	Reference
a1	1.12 lb/ft U-Channel Sign Post, 96 in. Long	ASTM A499 Gr. 60	PO#E000562398 Grainger COC
b1	36" x 12 x 0.08" Sign with Reflective Sheeting	Aluminum Alloy 5052 or Similar	PO# RTS-143048 SmartSign COC
c1	$^{5}/_{16}$" – 18 UNC, 1¾" Long Hex Bolt	SAE J429 Gr. 5 or 9	O# 210201258 Heat # WX544 Jinn Her COI
c2	$^{5}/_{16}$" 18 UNC, Heavy Hex Nut	SAE J995 Gr. 5 or 9	PO# 120125701 Heat # S9917 L # S30-1202-01
c3	⅜" Dia. Lock Washer	Low Carbon Steel	PO# 170061763 Heat # F590002992
c4	$^{5}/_{16}$" Dia. Plain Round Washer	Low Carbon Steel	PO# 210219699 Heat # 812B33450

GRAINGER
FOR THE ONES WHO GET IT DONE

Certificate of Conformance

W.W. Grainger, Inc.
100 Grainger Parkway
Lake Forest, IL. 60045-5201

September 17 2018

Attn: SHAUN M TIGHE
SHAUN M TIGHE
CANFIELD ADMINISTRATION
BLDG
LINCOLN, NE, 68588-0439

Fax #

Grainger Sales Order #: 1331380123
Customer PO #: E000562398

Dear SHAUN M TIGHE
As you requested, we are providing you with the following information. We certify that, to the best of Grainger's actual knowledge, the products described below conform to the respective manufacturer's specifications as described and approved by the manufacturer.

Item #	Description	Vendor Part #	Catalog Page #	Order Quantity
39F187	Post,U Channel,Green,8 ft.	054-00014	1834	2.000

Shea Gallup
Process Management Analyst
Compliance Team
Grainger Industrial Supply

Figure B-1. 1.12 lb/ft U-Channel Sign Post, 96 in. Long, Test No. UCSS-2

SmartSign

300 Cadman Plaza West, ste 1303
Brooklyn NY 11201
Phone: 1-800-952-1457

9/11/18

CERTIFICATE OF COMPLIANCE

Smartsign hereby certifies that all materials supplied against purchase order RTS-143048 shipped on 9/10/18 conforms to the material and/ or manufacturing specifications as called on this said purchase order without expectations.

Item #
X-OM-3L

Description:
Type 3 Object Marker

Sincerely,

Tahyna Colon
Call Center Manager
tahyna@smartsign.com
800-952-1457 x 7140

Figure B-2. 36-in. x 12-in. x 0.08-in. Sign with Reflective Sheeting, Test No. UCSS-2

Jinn Her Enterprise Co., Ltd.

No. 107, SHIN-LO ST, KANGSHAN, 820 KAOHSIUNG, TAIWAN R. O. C
TEL : +886 (07) 6229801 FAX : +886 (07) 6223750 • +886 (07) 6211503

CERTIFICATE OF INSPECTION

1 / 1

CUSTOMER NAME	: FASTENAL COMPANY PURCHASING	REPORT NO	: JH20032703001
CUSTOMER'S ADDRESS	: 4730 N. SERVICE DRIVE, WINONA MN. 55987U.S.A.,TEL : 507-313-7020FAX: 507-494-7833	REPORT DATE	: 2020/04/11
		BOLT LOT NO	: BZ.194070Z2
		BOLT MATERIAL	: SAE 1035
ORDER NUMBER	: 210201258	BOLT HEAT NO	: WX544
PART NUMBER	: 13060	NUT LOTNO	:
DESCRIPTION	: HEX CAP SCREW G5,HD MARK:3 RADIAL LINES&"JH"	NUT MATERIAL	:
		NUT HEAT NO	:
		WASHER LOT NO	:
SIZE	: 5/16-18X1-3/4 NC	WASHER MATERIAL	:
FINISH	: H.T. ZINC & CLEAR 5 MICRON, TRIVALENT CHROMATE	WASHER HEAT NO	:
SHIP QUANTITY	: 30600	ASSEMBLY LOT NO	:
BOLT MFR.	: JINN HER ENTERPRISE CO.,LTD.	BOLT MFR. DATE	: 2019/07/23
NUT MFR.	:	NUT MFR. DATE	:
WASHER MFR.	:	WASHER MFR. DATE	:

BOLT DIMENSIONAL INSPECTION — INSPECTION : 2019/08/06
SPECIFICATION : ASME B18.2.1-2012 — SAMPLING STANDARD : ASME B18.18-17

CHARACTERISTIC	TEST METHOD	STANDARD	UNIT	TEST VALUE	SAMPLE	ACC	REJ
WIDTH ACROSS CORNERS	JIS B1071:2010	0.5570-0.5700	inch	0.5637-0.5649	6	6	0
WIDTH ACROSS FLATS	JIS B1071:2010	0.4890-0.5000	inch	0.4960-0.4972	6	6	0
HEIGHT	JIS B1071:2010	0.1950-0.2110	inch	0.2086-0.2098	6	6	0
BODY DIA.	JIS B1071:2010	0.3065-0.3125	inch	0.3082-0.3094	6	6	0
BODY LENGTH	JIS B1071:2010	MIN 0.6000	inch	0.6358-0.6381	15	15	0
GRIP LENGTH	JIS B1071:2010	MAX 0.8800	inch	0.7070-0.7133	15	15	0
LENGTH	JIS B1071:2010	1.7100-1.7500	inch	1.7228-1.7271	15	15	0
THREAD	ASME B1.3-2007(R2017)	NONE	N/A	PASS	6	6	0

BOLT MECHANICAL INSPECTION — INSPECTION : 2019/08/05
SPECIFICATION : ASTM F2328-17 — SAMPLING STANDARD : ASTM F1470-19

CHARACTERISTIC	TEST METHOD	STANDARD	UNIT	TEST VALUE	SAMPLE	ACC	REJ
COMPLETELY DEC. DEPTH	ASTM F2328-17	MAX 0.0006	inch	PASS	4	4	0
BASE METAL	ASTM F2328-17	MIN 0.0170	inch	PASS	4	4	0

BOLT MECHANICAL INSPECTION — INSPECTION : 2019/08/05
SPECIFICATION : SAE J429 MAY2014 — SAMPLING STANDARD : ASTM F1470-19

CHARACTERISTIC	TEST METHOD	STANDARD	UNIT	TEST VALUE	SAMPLE	ACC	REJ
SURFACE HARDNESS	ASTM F606/F606M-16	MAX 54.0	HR30N	51.0-51.0	6	6	0
CORE HARDNESS	ASTM F606/F606M-16	25.0-34.0	HRC	31.0-32.0	6	6	0
TENSILE STRENGTH	ASTM F606/F606M-16	MIN 120.0	ksi	140.0-142.0	4	4	0
PROOF LOAD	ASTM F606/F606M-16	MIN 85.0	ksi	PASS	4	4	0

BOLT FINISH INSPECTION — INSPECTION : 2019/08/06
SPECIFICATION : ASTM F1941/F1941M-16 — SAMPLING STANDARD : ASTM F1470-19

CHARACTERISTIC	TEST METHOD	STANDARD	UNIT	TEST VALUE	SAMPLE	ACC	REJ
THICKNESS OF COATING	ASTM A754/A754M-18	MIN 0.00020	inch	0.00037-0.00059	15	15	0

BOLT APPEARANCE INSPECTION — INSPECTION : 2019/08/06
SPECIFICATION : ASTM F788-13(2018) — SAMPLING STANDARD : ASME B18.18-17

CHARACTERISTIC	TEST METHOD	STANDARD	UNIT	TEST VALUE	SAMPLE	ACC	REJ
GENERAL WORKMANSHIP 、MARKING	VISION	NONE	N/A	PASS	29	29	0

CHEMICAL ANALYSIS %

HEAT NO	C-x100	MN-x100	P-x1000	S-x1000	SI-x100	CU-x100	NI-x100	CR-x100	MO-x100	AL-x1000	B-x10000	V-x100
WX544	34	68	12	6	28	10	4	7	1	6	3	

BOLT MARKING

Remark : 1.Lab is accredited according to ISO/IEC17025 requirements. This certificate is valid with signature of Wen-Da Tsai.
2.This test certificate is responsible for designated samples only. This test certificate only relates to the items listed and tested, it's not allowed to be partially used.
3.The above composition is quoted from original mill certs which is not in the scope of Lab Accreditation.
4.This test certificate in accordance with EN ISO 16228 F3.1 (EN 10204 type 3.1).Product meets the order requirement.
5.Unless specified by the customer, the latest version of the testing specs was used.
6.Quality System conforms to ISO 9001 requirements and certified by TUV .

LAB SUPERVISOR :

210201258

13060

BZ.194070Z2

Figure B-3. $^{5}/_{16}$-in., 1¾-in. Long Hex Bolt, Test No. UCSS-2

SUPER CHENG INDUSTRIAL CO.,LTD.

NO. 18 BEN-GONG 2nd ROAD., BEN CHOU INDUSTRIAL PARK, KAOHSIUNG COUNTY 820, TAIWAN R.O.C.
TEL：886-7-6225326-30(5 LINES) FAX：886-7-6215377/6212335/6235829

CERTIFICATE OF INSPECTION

CERT. #： S30-1202-01 ISSUED DATE： 2012/3/21 PAGE 1 OF 1

CLIENT：SUPER CHENG INDUSTRIAL CO., LTD.
ADDRESS：NO. 18 BEN-GONG 2nd ROAD., BEN CHOU INDUSTRIAL PARK, KAOHSIUNG COUNTY 820, TAIWAN R.O.C.

PURCHASER： FASTENAL COMPANY PURCHASING PART #0169344 PO #：120125701 QTY SHIPPED：136,900PCS

COMMODITY：GRADE 5 HEAVY HEX NUT FINISH： TRIVALENT ZINC
SIZE： 5/16-18 LOT#： S30-1202-01 SAMPLING PLAN：ANSI/ASME B18.18.2M-93
QTY： 139423 PCS MATERIAL： SAE 1010 HEAT NO.： S9917
MANUFACTURER：SUPER CHENG IND. CO., LTD. MANU. DATE： 2012/3/5

DIMENSIONAL INSPECTION SPEC.：ANSI/ASME B18.2.2-10 SAMPLED BY： HSUAN HUI WENG

ITEM	SAMPLE SIZE	SPECIFIED	ACTUAL RESULT	JUDGMENT
APPEARANCE	100	ASTM F812-07	GOOD	OK
W.A.F.	32	0.562 ~ 0.546 in.	0.557 ~ 0.556 in.	OK
W.A.C.	8	0.650 ~ 0.622 in.	0.630 ~ 0.624 in.	OK
THICKNESS	8	0.314 ~ 0.280 in.	0.296 ~ 0.294 in.	OK
THREAD	32	ANSI/ASME B1.1	PASS	OK

MECHANICAL PROPERTIES SPEC.：SAE J995-11 SAMPLED BY： HSUAN HUI WENG

ITEM	SAMPLE SIZE	TEST METHOD	SPECIFIED	ACTUAL RESULT	JUDGMENT
HARDNESS	8	ASTM F606-10	MAX HRC32	11.0 ~ 9.0 HRC	PASS
PROOF LOAD	4	ASTM F606-10	MIN 6950LB	7125 ~ 7088 LB	PASS

REMARK：1、THIS REPORT SHALL NOT BE REPRODUCED EXCEPT IN FULL WITHOUT WRITTEN APPROVAL OF THE LAB.
2、THIS INSPECTION CERTIFICATE IS FOR RESPONSIBILITY UNDER SAMPLE ONLY.
3、ABOVE SAMPLES TESTED CONFORM TO THE FASTENER SPECIFICATION OR STANDARDS.

LAB. DIRECTOR(SIGNATORY)：

表單編號：LQC 10E Rev.0

Figure B-4. $^{5}/_{16}$-in. Heavy Hex Nut, Test No. UCSS-2

HANGZHOU SPRING WASHER CO.,LTD

QUALITY TEST CERTIFICATE OF SPRING LOCK WASHER

Standard: ASME B 18.21.1-2009 Contract No.: 15HZW11416

Order No.: PO 170061763 Invoice No.: 16SHD042

Chemical Composition (%)	C	Si	Mn	P	S	Cr	Ni	Cu
	0.64	0.22	0.6	0.012	0.005	0.03	0.03	0.07
Heat No.	F590002992							

Specification		3/8" MECH					
Quantity		606 M					
Lot No.		1511377					
Part No.		133622					
Testing Item	Ac/n	Norm	Result	Reject	Norm	Result	Reject
Inside Diameter	2/100	9.58-9.78	9.60-9.78	0			
Outside Diameter	1/32	Max17.27	Max17.26	0			
Width	1/32	Min3.58	Min3.66	0			
Thickness	1/32	2.39-2.64	2.47-2.52	0			
Height							
Section							
Surface Defects	2/100	None	None	0			
Hardness	0/8	HRC38-46	HRC39-41	0			
Springing							
Toughness	0/8	Qualified	Qualified	0			

General:

The spring lock washers are conformed with the standard of ASME B 18.21.1-2009. QUALIFI

Inspector: Shiweiqing Quality Inspection Chief: Date: 2021.08.04

Figure B-5. ⅜-in. Dia. Lock Washer, Test No. UCSS-2

FNL Part#0159678

Prestige Stamping, LLC

23513 Groesbeck Highway
Warren, Michigan 48089
(586)773-2700 * Fax (586)773-2298
www.PrestigeStamping.com

PRODUCT CERTIFICATION

CERTIFICATION NUMBER

214445

THIS IS TO CERTIFY THE PRODUCT STATED BELOW WAS FABRICATED AND PROCESSED TO THE ORDER AS INDICATED AND CONFORMS TO THE APPLICABLE SPECIFICATIONS AND STANDARDS.

Customer: FASTENAL/EDWARDSVILLE
9911 WOODEND ROAD
EDWARDSVILLE, KS 66111
USA

Customer Part: 5/16"USS ZINC
Prestige Part: P0889MP00
Part Name: 5/16"USS ZINC RoHS COMPLIANT
Purchase Order: 210219699
Shipment BOL: B225849
Shipment ID: A0246228
Quantity: 8000
Manufacturers Marking: "P"

Steel Supplier: KENWAL STEEL CORP.
Grade: CSECONDARY STEEL
Lot: D8038
Heat: 812B33450
Carbon: .08
Manganese: .37
Phosphorous: .018
Sulfur: .008
Silicon: .011

SPECIFICATIONS	TEST RESULTS
PLATING: TEST METHOD: ASTM B499 0.00015" Min. ELELCTRO ZINC & TRIVALENT CLEAR-PER ASTM B633 TYPE III,SC1,HEX FREE	PLATING: 0.00020" - 0.00030"

USS/SAE LC Washers are manufactured to the requirements of ASTM F844 specifications
Chemistry is as reported from raw material certification and does not fall under Prestige Stamping's accreditation.
This product was produced under an IATF 16949 Quality Assurance System.
IATF 16949 Certification No: 800334.
Material was melted and manufactured in the U.S.A.
This product was manufactured in Warren, Michigan U.S.A.
This product conforms to all requirements for washers as produced according to ANSI/ASMI B18.22.1.
Mechanical properties and test methods for hardness conform to ASTM F436
Sampling Plan per P.S.I W.I. # 5.4.18.015.
The test results only apply to the items tested.
This test report must not be reproduced except in full without prior written approval.
Materials used to manufacture these products are mercury, asbestos and radio activity free.
Product is RoHS compliant.
No weld repairs made to material.
All certified product is AIS compliant.

FRANK SCHUBERT
Quality Assurance Manager

Econ Information System 05/28/20 09:57 CDUM PAGE 1 of 1

Figure B-6. $^{5}/_{16}$-in. Dia. Plain Round Washer, Test No. UCSS-2

Appendix C. Test No. UCSS-3 Material Specifications

Table C-1. Bill of Materials, Test No. UCSS-3

Item No.	Description	Material Specification	Reference
a1	4.00 lb/ft U-Channel Sign Post, 120" Long	ASTM A499 Gr. 60	PO# 1543 Franklin Industries COC
a2	4.00 lb/ft U-Channel Sign Post, 42" Long	ASTM A499 Gr. 60	PO# 1543 Franklin Industries COC
b1	36"x36"x0.08" Sign with Reflective Sheeting	Aluminum Alloy 5052 or Similar	PO# RTS-143551 SmartSign COC
c1	$^{5}/_{16}$"-18 UNC, 2 3/4" Long Hex Bolt	SAE J429 Gr. 5 or 9	PO# 350006957 Heat # 10229550
c2	$^{5}/_{16}$"-18 UNC, 2 1/4" Long Hex Bolt	SAE J429 Gr. 9	PO# 350007110 Heat # 10242060
c3	$^{5}/_{16}$"-18 UNC Heavy Hex Nut	SAE J995 Gr. 5 or 9	PO# 110272626 Heat # 10550980
c4	⅜" Dia. Lock Washer	Low Carbon Steel	PO# 170061763 Heat # F590002992
c5	$^{5}/_{16}$" Dia. Plain Round Washer	Low Carbon Steel	PO# 210219699 Heat # 812B33450
c6	1"x⅝" Post Spacer	-	PO# UCSS Fastenal COC

Franklin Industries

CERTIFICATE OF COMPLIANCE

July 12, 2018

Sanbar Construction
9101 Broadway SE
Albuquerque, NM 87105

RE: Customer Purchase Order No: 1543
Franklin Industries' Folio No: H5018
Franklin Industries' Product: 7', 1.12lb. per ft. 10', 11', 3'6, 3lb. per ft. green u channel post.

We hereby certify that all posts manufactured by Franklin Industries Co are hot rolled and fabricated in Franklin, Pennsylvania and have been produced from recycled Standard T rails weighing 91 lbs. / yard or heavier, complying with ASTM specification A499-89, Grade 60. Standard T rails used for products subject to "Buy America" requirements were produced according to ASTM A1 from rails melted and rolled in the United States of America.

Yours truly,

Darlene Suttle
Customer Service/Sales

PO Box 671 Franklin, PA 16323
Sales Office 814.437.3726
Fax 814.432.7556

Figure C-1. 4.00 lb/ft U-Channel Sign Post, Test No. UCSS-3

SmartSign

300 Cadman Plaza West, ste 1303
Brooklyn NY 11201
Phone: 1-800-952-1457

9/18/18

CERTIFICATE OF COMPLIANCE

Smartsign hereby certifies that all materials supplied against purchase order PO: RTS-143551, shipped on 9/17/18 conforms to the material and/ or manufacturing specifications as called on this said purchase order without expectations.

Item #
X-R5-1

Description: Do not Enter, [Engineer Grade Reflective Aluminum Sign, 80 mil

Sincerely,

Tahyna Colon
Call Center Manager
tahyna@smartsign.com
800-952-1457 x 7140

Figure C-2. 36-in. x 36-in. x 0.08-in. Sign with Reflective Sheeting, Test No. UCSS-3

LOAD

CHARTER STEEL

A Division of
Charter Manufacturing Company, Inc.

CHARTER STEEL TEST REPORT
Reverse Has Text And Codes

1658 Cold Springs Road
Saukville, Wisconsin 53080
(262) 268-2400
1-800-437-8789
FAX (262) 268-2570

Fastenal-West Hartford
61 Barnes Industrial Park North
Wallingford,CT-06492
Kind Attn :Mark Leone

Cust P.O.	350006957
Customer Part #	0970917
Charter Sales Order	30053773
Heat #	10229550
Ship Lot #	4182846
Grade	8640 R SK FG RHQ 3/8
Process	SA+SAFS
Finish Size	0.3265

I hereby certify that the material described herein has been manufactured in accordance with the specifications and standards listed below and on the reverse side,and that it satisfies these requirements.

Test Results of Heat Lot# 10229550

Lab Code: 7388

CHEM	C	MN	P	S	SI	NI	CR	MO	CU	SN	V
%Wt	.39	.85	.010	.007	.230	.44	.43	.22	.13	.009	.003
	AL	N	B	TI	NB						
	.025	.0060	.0001	.002	.002						

JOMINY(HRC)	JOM01	JOM02	JOM03	JOM04	JOM05	JOM06	JOM07	JOM08	JOM09	JOM10	JOM12
	56	56	56	53	52	48	46	44	43	41	38
	JOM14	JOM16	JOM18	JOM20	JOM24	JOM28	JOM32				
	36	34	33	32	30	28	27				

JOMINY SAMPLE TYPE ENGLISH = C
CHEM. DEVIATION EXT.-GREEN =

3-2359

Test Results of Rolling Lot# 1084924

REDUCTION RATIO = 274:1

Test Results of Processing Lot# 4182487,4182846

	# of Tests	Min Value	Max Value	Mean Value	
TENSILE	1.0	72.6	72.6	72.6	TENSILE LAB = 0358-02
REDUCTION OF AREA	1	76	76	76	RA LAB = 0358-02
ROCKWELL B	1	76	76	76	RB LAB = 0358-02

NUM DECARB = 1 FREE FERRITE DECARB = .000 FREE FERR & PARTIAL DECARB = .002

Specifications: Manufactured per Charter Steel Quality Manual Rev 9,08-01-09
Meets customer specifications with any applicable Charter Steel exceptions for the following customer documents:
Customer Document = QWI#23 - DETAIL 55 Revision = New Dated = 02-MAR-12

Additional Comments:

Charter Steel
Saukville, WI, USA

Rem: Load1,Fax0,Mail0

ACCREDITED Testing Laboratory

Page 1 of 1

This MTR supersedes all previously dated MTRs for this order

Janice Barnard
Manager of Quality Assurance
01/08/2013

Figure C-3. $^{5}/_{16}$-in., 2¾-in. Long Hex Bolt, Test No. UCSS-3

LOAD

CHARTER STEEL

A Division of
Charter Manufacturing Company, Inc.

CHARTER STEEL TEST REPORT
Reverse Has Text And Codes

1658 Cold Springs Road
Saukville, Wisconsin 53080
(262) 268-2400
1-800-437-8789
FAX (262) 268-2570

Fastenal-West Hartford
61 Barnes Industrial Park North
Wallingford,CT-06492
Kind Attn :Mark Leone

Cust P.O.	350007110
Customer Part #	0970917
Charter Sales Order	30054252
Heat #	10242060
Ship Lot #	4199470
Grade	8640 R SK FG RHQ 3/8
Process	SA+SAFS
Finish Size	0.3265

I hereby certify that the material described herein has been manufactured in accordance with the specifications and standards listed below and on the reverse side,and that it satisfies these requirements.

Test Results of Heat Lot# 10242060

Lab Code: 7388

CHEM	C	MN	P	S	SI	NI	CR	MO	CU	SN	V
%Wt	.38	.86	.010	.007	.220	.46	.42	.21	.17	.009	.003
	AL	N	B	TI	NB						
	.026	.0070	.0001	.001	.002						

JOMINY(HRC)	JOM01	JOM02	JOM03	JOM04	JOM05	JOM06	JOM07	JOM08	JOM09	JOM10	JOM12
	55	55	55	53	50	47	45	43	41	40	37
	JOM14	JOM16	JOM18	JOM20	JOM24	JOM28	JOM32				
	35	33	32	30	28	27	26				

JOMINY SAMPLE TYPE ENGLISH = C
CHEM. DEVIATION EXT.-GREEN =

3.2366

Test Results of Rolling Lot# 1090751

REDUCTION RATIO = 274:1

Test Results of Processing Lot# 4195387,4199470

	# of Tests	Min Value	Max Value	Mean Value	
TENSILE	1.0	72.2	72.2	72.2	TENSILE LAB = 0358-02
REDUCTION OF AREA	1	78	78	78	RA LAB = 0358-02
ROCKWELL B	1	77	77	77	RB LAB = 0358-02

NUM DECARB = 1 FREE FERRITE DECARB = .000 FREE FERR & PARTIAL DECARB = .002

Specifications: Manufactured per Charter Steel Quality Manual Rev 9,08-01-09
Meets customer specifications with any applicable Charter Steel exceptions for the following customer documents:
Customer Document = QWI#23 - DETAIL 55 Revision = New Dated = 02-MAR-12

Additional Comments:

Charter Steel
Saukville, WI, USA

Rem: Load1,Fax0,Mail0

ACCREDITED Page 1 of 1
Testing Laboratory

This MTR supersedes all previously dated MTRs for this order

Janice Barnard
Manager of Quality Assurance
04/02/2013

Figure C-4. $^{5}/_{16}$-in., 2¼-in. Long Hex Bolt, Test No. UCSS-3

ELGIN FASTENER GROUP
BEREA INC

MATERIAL CERTIFICATION

Customer: FASTENAL COMPANY 2001 THEURER BLVD. WINONA MN 55987		**Date:** 11/27/2018
	Customer P.O. Number:	110272626
	Customer Part Number:	11541092
	Invoice Number:	84820
	Lot Number:	0112010-152162-152163
Description: NUT THICK HEX 5/16-18 FNL9 ORG	**Ship Quantity:** 24000	**Ship Date:** 11/27/2018
	Material: 1035	**Heat Number:** 10550980
Specification:		

C	Mn	P	S	Si	Ni	Cr	Mo	Al
0.340	0.750	0.006	0.007	0.210	0.040	0.080	0.010	0.004

Hardness	C 35.0
Proof Load:	5 passed at 180,000 psi min
Plating	Geomet 321 + XL - Pass

We hereby certify that to our actual knowledge the information contained herein is correct. We also certify that all parts substantially conform to SAE, ASTM, or customer specifications as agreed upon. The product has been manufactured and tested in accordance with our Quality Assurance manual. The above data accurately represents values provided by our suppliers or values generated in the EFG-BEREA laboratory. Statistical process control data is on file. All manufacturing processes for these parts occurred in the United States of America.
* Processed Mercury Free using material that is Free of Welds.

This document may only be reproduced without alteration and only for the purpose of certifying the quantity of the product specified here.

Joe Kilpatrick

Joe Kilpatrick
Quality Technician

Figure C-5. $^{5}/_{16}$-in. Heavy Hex Nut, Test No. UCSS-3

HANGZHOU SPRING WASHER CO.,LTD

QUALITY TEST CERTIFICATE OF SPRING LOCK WASHER

Standard: ASME B 18.21.1-2009 Contract No.: 15HZW11416

Order No.: PO 170061763 Invoice No.: 16SHD042

Chemical Composition (%)	C	Si	Mn	P	S	Cr	Ni	Cu
	0.64	0.22	0.6	0.012	0.005	0.03	0.03	0.07
Heat No.	F590002992							

Specification		3/8" MECH					
Quantity		606 M					
Lot No.		1511377					
Part No.		133622					
Testing Item	Ac/n	Norm	Result	Reject	Norm	Result	Reject
Inside Diameter	2/100	9.58-9.78	9.60-9.78	0			
Outside Diameter	1/32	Max17.27	Max17.26	0			
Width	1/32	Min3.58	Min3.66	0			
Thickness	1/32	2.39-2.64	2.47-2.52	0			
Height							
Section							
Surface Defects	2/100	None	None	0			
Hardness	0/8	HRC38-46	HRC39-41	0			
Springing							
Toughness	0/8	Qualified	Qualified	0			

General:

The spring lock washers are conformed with the standard of ASME B 18.21.1-2009. QUALIFI

Inspector: Shiweiqing Quality Inspection Chief: Date: 2021.08.04

Figure C-6. ⅜-in. Dia. Lock Washer, Test No. UCSS-3

FNL Part#0159678

Prestige Stamping, LLC

23513 Groesbeck Highway
Warren, Michigan 48089
(586)773-2700 * Fax (586)773-2298
www.PrestigeStamping.com

PRODUCT CERTIFICATION

CERTIFICATION NUMBER

214445

THIS IS TO CERTIFY THE PRODUCT STATED BELOW WAS FABRICATED AND PROCESSED TO THE ORDER AS INDICATED AND CONFORMS TO THE APPLICABLE SPECIFICATIONS AND STANDARDS.

Customer: FASTENAL/EDWARDSVILLE
9911 WOODEND ROAD
EDWARDSVILLE, KS 66111
USA

Customer Part: 5/16"USS ZINC
Prestige Part: P0889MP00
Part Name: 5/16"USS ZINC RoHS COMPLIANT
Purchase Order: 210219699
Shipment BOL: B225849
Shipment ID: A0246228
Quantity: 8000
Manufacturers Marking: "P"

Steel Supplier: KENWAL STEEL CORP.
Grade: CSECONDARY STEEL
Lot: D8038
Heat: 812B33450
Carbon: .08
Manganese: .37
Phosphorous: .018
Sulfur: .008
Silicon: .011

SPECIFICATIONS	TEST RESULTS
PLATING: TEST METHOD: ASTM B499 0.00015" Min. ELELCTRO ZINC & TRIVALENT CLEAR-PER ASTM B633 TYPE III,SC1,HEX FREE	PLATING: 0.00020" - 0.00030"

USS/SAE LC Washers are manufactured to the requirements of ASTM F844 specifications
Chemistry is as reported from raw material certification and does not fall under Prestige Stamping's accreditation.
This product was produced under an IATF 16949 Quality Assurance System.
IATF 16949 Certification No: 800334.
Material was melted and manufactured in the U.S.A.
This product was manufactured in Warren, Michigan U.S.A.
This product conforms to all requirements for washers as produced according to ANSI/ASMI B18.22.1.
Mechanical properties and test methods for hardness conform to ASTM F436
Sampling Plan per P.S.I W.I. # 5.4.18.015.
The test results only apply to the items tested.
This test report must not be reproduced except in full without prior written approval.
Materials used to manufacture these products are mercury, asbestos and radio activity free.
Product is RoHS compliant.
No weld repairs made to material.
All certified product is AIS compliant.

FRANK SCHUBERT
Quality Assurance Manager

Econ Information System 05/28/20 09:57 CDUM PAGE 1 of 1

Figure C-7. $^{5}/_{16}$-in. Dia. Plain Round Washer, Test No. UCSS-3

FASTENAL®

Certificate of Compliance

Sold To:

UNL TRANSPORTATION/Midwest Roadside Safe

Purchase Order: UCSS

Job: item# c6

Invoice Date: 08/6/2020

THIS IS TO CERTIFY THAT WE HAVE SUPPLIED YOU WITH THE FOLLOWING PARTS.
THESE PARTS WERE PURCHASED TO THE FOLLOWING SPECIFICATIONS.

5 PCS 3/4 3/8 1/2 Chrome Spacer - OD/ID/Length SUPPLIED UNDER OUR TRACE NUMBER 210221332 AND UNDER PART NUMBER 0185761

This is to certify that the above document is true and accurate to the best of my knowledge.

Fastenal Account Representative Signature

Ross Schall

Printed Name

8-6-2020

Date

Please check current revision to avoid using obsolete copies.

This document was printed on 08/06/2020 and was current at that time.

Fastenal Store Location/Address

3201 N. 23rd Street STE 1
LINCOLN, NE 68521
Phone #: (402)476-7900
Fax #: 402/476-7958

Page 1 of 1

Figure C-8. 1-in. x ⅝-in. Post Spacer, Test No. UCSS-3

Appendix D. Test No. UCSS-4 Material Specifications

Table D-1. Bill of Materials, Test No. UCSS-4

Item No.	Description	Material Specification	Reference
a1	4.00 lb/ft U-Channel Sign Post, 96" Long	ASTM A499 Gr. 60	PO# 1543 Franklin Industries COC
a2	4.00 lb/ft U-Channel Sign Post, 42" Long	ASTM A499 Gr. 60	PO# 1543 Franklin Industries COC
b1	36"x36"x0.08" Sign with Reflective Sheeting	Aluminum Alloy 5052 or Similar	PO# RTS-143551 SmartSign COC
c1	$^{5}/_{16}$"-18 UNC, 2 3/4" Long Hex Bolt	SAE J429 Gr. 5 or 9	PO# 350006957 Heat # 10229550
c2	$^{5}/_{16}$"-18 UNC, 2 1/4" Long Hex Bolt	SAE J429 Gr. 9	PO# 350007110 Heat # 10242060
c3	$^{5}/_{16}$"-18 UNC Heavy Hex Nut	SAE J995 Gr. 5 or 9	PO# 110272626 Heat # 10550980
c4	⅜" Dia. Lock Washer	Low Carbon Steel	PO# 170061763 Heat # F590002992
c5	$^{5}/_{16}$" Dia. Plain Round Washer	Low Carbon Steel	PO# 210219699 Heat # 812B33450
c6	1"x⅝" Post Spacer	Steel	PO# UCSS Fastenal COC

Franklin Industries

CERTIFICATE OF COMPLIANCE

July 12, 2018

Sanbar Construction
9101 Broadway SE
Albuquerque, NM 87105

RE: Customer Purchase Order No: 1543
Franklin Industries' Folio No: H5018
Franklin Industries' Product: 7', 1.12lb. per ft. 10', 11', 3'6, 3lb. per ft. green u channel post.

We hereby certify that all posts manufactured by Franklin Industries Co are hot rolled and fabricated in Franklin, Pennsylvania and have been produced from recycled Standard T rails weighing 91 lbs. / yard or heavier, complying with ASTM specification A499-89, Grade 60. Standard T rails used for products subject to "Buy America" requirements were produced according to ASTM A1 from rails melted and rolled in the United States of America.

Yours truly,

Darlene Suttle
Customer Service/Sales

PO Box 671 Franklin, PA 16323
Sales Office 814.437.3726
Fax 814.432.7556

Figure D-1. 4.00 lb/ft U-Channel Sign Post, Test No. UCSS-4

SmartSign

300 Cadman Plaza West, ste 1303
Brooklyn NY 11201
Phone: 1-800-952-1457

9/18/18

CERTIFICATE OF COMPLIANCE

Smartsign hereby certifies that all materials supplied against purchase order PO: RTS-143551, shipped on 9/17/18 conforms to the material and/ or manufacturing specifications as called on this said purchase order without expectations.

Item #
X-R5-1

Description: Do not Enter, [Engineer Grade Reflective Aluminum Sign, 80 mil

Sincerely,

Tahyna Colon
Call Center Manager
tahyna@smartsign.com
800-952-1457 x 7140

Figure D-2. 36-in. x 36-in. x 0.08-in. Sign with Reflective Sheeting, Test No. UCSS-4

LOAD

CHARTER STEEL

A Division of
Charter Manufacturing Company, Inc.

CHARTER STEEL TEST REPORT
Reverse Has Text And Codes

1658 Cold Springs Road
Saukville, Wisconsin 53080
(262) 268-2400
1-800-437-8789
FAX (262) 268-2570

Fastenal-West Hartford
61 Barnes Industrial Park North
Wallingford,CT-06492
Kind Attn :Mark Leone

Cust P.O.	350006957
Customer Part #	0970917
Charter Sales Order	30053773
Heat #	10229550
Ship Lot #	4182846
Grade	8640 R SK FG RHQ 3/8
Process	SA+SAFS
Finish Size	0.3265

I hereby certify that the material described herein has been manufactured in accordance with the specifications and standards listed below and on the reverse side,and that it satisfies these requirements.

Test Results of Heat Lot# 10229550

Lab Code: 7388

CHEM	C	MN	P	S	SI	NI	CR	MO	CU	SN	V
%Wt	.39	.85	.010	.007	.230	.44	.43	.22	.13	.009	.003
	AL	N	B	TI	NB						
	.025	.0060	.0001	.002	.002						

JOMINY(HRC)	JOM01	JOM02	JOM03	JOM04	JOM05	JOM06	JOM07	JOM08	JOM09	JOM10	JOM12
	56	56	56	53	52	48	46	44	43	41	38
	JOM14	JOM16	JOM18	JOM20	JOM24	JOM28	JOM32				
	36	34	33	32	30	28	27				

JOMINY SAMPLE TYPE ENGLISH = C
CHEM. DEVIATION EXT.-GREEN =

3-2359

Test Results of Rolling Lot# 1084924

REDUCTION RATIO = 274:1

Test Results of Processing Lot# 4182487,4182846

	# of Tests	Min Value	Max Value	Mean Value	
TENSILE	1.0	72.6	72.6	72.6	TENSILE LAB = 0358-02
REDUCTION OF AREA	1	76	76	76	RA LAB = 0358-02
ROCKWELL B	1	76	76	76	RB LAB = 0358-02

NUM DECARB = 1 FREE FERRITE DECARB = .000 FREE FERR & PARTIAL DECARB = .002

Specifications: Manufactured per Charter Steel Quality Manual Rev 9,08-01-09
Meets customer specifications with any applicable Charter Steel exceptions for the following customer documents:
Customer Document = QWI#23 - DETAIL 55 Revision = New Dated = 02-MAR-12

Additional Comments:

Charter Steel
Saukville, WI, USA

Rem: Load1,Fax0,Mail0

ACCREDITED Testing Laboratory

Page 1 of 1

This MTR supersedes all previously dated MTRs for this order

Janice Barnard
Manager of Quality Assurance
01/08/2013

Figure D-3. $^{5}/_{16}$-in., 2¾-in. Long Hex Bolt, Test No. UCSS-4

LOAD

CHARTER STEEL

A Division of
Charter Manufacturing Company, Inc.

CHARTER STEEL TEST REPORT
Reverse Has Text And Codes

1658 Cold Springs Road
Saukville, Wisconsin 53080
(262) 268-2400
1-800-437-8789
FAX (262) 268-2570

Fastenal-West Hartford
61 Barnes Industrial Park North
Wallingford,CT-06492
Kind Attn :Mark Leone

Cust P.O.	350007110
Customer Part #	0970917
Charter Sales Order	30054252
Heat #	10242060
Ship Lot #	4199470
Grade	8640 R SK FG RHQ 3/8
Process	SA+SAFS
Finish Size	0.3265

I hereby certify that the material described herein has been manufactured in accordance with the specifications and standards listed below and on the reverse side,and that it satisfies these requirements.

Test Results of Heat Lot# 10242060

Lab Code: 7388

CHEM	C	MN	P	S	SI	NI	CR	MO	CU	SN	V
%Wt	.38	.86	.010	.007	.220	.46	.42	.21	.17	.009	.003

	AL	N	B	TI	NB
	.026	.0070	.0001	.001	.002

JOMINY(HRC)	JOM01	JOM02	JOM03	JOM04	JOM05	JOM06	JOM07	JOM08	JOM09	JOM10	JOM12
	55	55	55	53	50	47	45	43	41	40	37

	JOM14	JOM16	JOM18	JOM20	JOM24	JOM28	JOM32
	35	33	32	30	28	27	26

JOMINY SAMPLE TYPE ENGLISH = C
CHEM. DEVIATION EXT.-GREEN =

3.2366

Test Results of Rolling Lot# 1090751

REDUCTION RATIO = 274:1

Test Results of Processing Lot# 4195387,4199470

	# of Tests	Min Value	Max Value	Mean Value	
TENSILE	1.0	72.2	72.2	72.2	TENSILE LAB = 0358-02
REDUCTION OF AREA	1	78	78	78	RA LAB = 0358-02
ROCKWELL B	1	77	77	77	RB LAB = 0358-02

NUM DECARB = 1 FREE FERRITE DECARB = .000 FREE FERR & PARTIAL DECARB = .002

Specifications: Manufactured per Charter Steel Quality Manual Rev 9,08-01-09
Meets customer specifications with any applicable Charter Steel exceptions for the following customer documents:
Customer Document = QWI#23 - DETAIL 55 Revision = New Dated = 02-MAR-12

Additional Comments:

Charter Steel
Saukville, WI, USA

Rem: Load1,Fax0,Mail0

ACCREDITED Page 1 of 1
Testing Laboratory

This MTR supersedes all previously dated MTRs for this order

Janice Barnard
Manager of Quality Assurance
04/02/2013

Figure D-4. $^{5}/_{16}$-in., 2¼-in. Long Hex Bolt, Test No. UCSS-4

ELGIN FASTENER GROUP
BEREA OHIO

MATERIAL CERTIFICATION

Customer: FASTENAL COMPANY 2001 THEURER BLVD. WINONA MN 55987		**Date:** 11/27/2018
	Customer P.O. Number:	110272626
	Customer Part Number:	11541092
	Invoice Number:	84820
	Lot Number:	0112010-152162-152163
Description: NUT THICK HEX 5/16-18 FNL9 ORG	**Ship Quantity:** 24000	**Ship Date:** 11/27/2018
	Material: 1035	**Heat Number:** 10550980
Specification:		

C	Mn	P	S	Si	Ni	Cr	Mo	Al
0.340	0.750	0.006	0.007	0.210	0.040	0.080	0.010	0.004

Hardness	C 35.0
Proof Load:	5 passed at 180,000 psi min
Plating	Geomet 321 + XL - Pass

We hereby certify that to our actual knowledge the information contained herein is correct. We also certify that all parts substantially conform to SAE, ASTM, or customer specifications as agreed upon. The product has been manufactured and tested in accordance with our Quality Assurance manual. The above data accurately represents values provided by our suppliers or values generated in the EFG-BEREA laboratory. Statistical process control data is on file. All manufacturing processes for these parts occurred in the United States of America.
* Processed Mercury Free using material that is Free of Welds.

This document may only be reproduced without alteration and only for the purpose of certifying the quantity of the product specified here.

Joe Kilpatrick

Joe Kilpatrick
Quality Technician

Figure D-5. $^{5}/_{16}$-in. Heavy Hex Nut, Test No. UCSS-4

HANGZHOU SPRING WASHER CO.,LTD

QUALITY TEST CERTIFICATE OF SPRING LOCK WASHER

Standard: ASME B 18.21.1-2009 Contract No.: 15HZW11416

Order No.: PO 170061763 Invoice No.: 16SHD042

Chemical Composition (%)	C	Si	Mn	P	S	Cr	Ni	Cu
	0.64	0.22	0.6	0.012	0.005	0.03	0.03	0.07
Heat No.	F590002992							

Specification	3/8" MECH	
Quantity	606 M	
Lot No.	1511377	
Part No.	133622	

Testing Item	Ac/n	Norm	Result	Reject	Norm	Result	Reject
Inside Diameter	2/100	9.58-9.78	9.60-9.78	0			
Outside Diameter	1/32	Max17.27	Max17.26	0			
Width	1/32	Min3.58	Min3.66	0			
Thickness	1/32	2.39-2.64	2.47-2.52	0			
Height							
Section							
Surface Defects	2/100	None	None	0			
Hardness	0/8	HRC38-46	HRC39-41	0			
Springing							
Toughness	0/8	Qualified	Qualified	0			

General:

The spring lock washers are conformed with the standard of ASME B 18.21.1-2009. QUALIFI

Inspector: Shiweiqing Quality Inspection Chief: Date: 2020.08.04

Figure D-6. ⅜-in. Dia. Lock Washer, Test No. UCSS-4

FNL Part#0159678

Prestige Stamping, LLC

23513 Groesbeck Highway
Warren, Michigan 48089
(586)773-2700 * Fax (586)773-2298
www.PrestigeStamping.com

PRODUCT CERTIFICATION

CERTIFICATION NUMBER

214445

THIS IS TO CERTIFY THE PRODUCT STATED BELOW WAS FABRICATED AND PROCESSED TO THE ORDER AS INDICATED AND CONFORMS TO THE APPLICABLE SPECIFICATIONS AND STANDARDS.

Customer: FASTENAL/EDWARDSVILLE
9911 WOODEND ROAD
EDWARDSVILLE, KS 66111
USA

Customer Part: 5/16"USS ZINC
Prestige Part: P0889MP00
Part Name: 5/16"USS ZINC RoHS COMPLIANT
Purchase Order: 210219699
Shipment BOL: B225849
Shipment ID: A0246228
Quantity: 8000
Manufacturers Marking: "P"

Steel Supplier: KENWAL STEEL CORP.
Grade: CSECONDARY STEEL
Lot: D8038
Heat: 812B33450
Carbon: .08
Manganese: .37
Phosphorous: .018
Sulfur: .008
Silicon: .011

SPECIFICATIONS	TEST RESULTS
PLATING: TEST METHOD: ASTM B499 0.00015" Min. ELELCTRO ZINC & TRIVALENT CLEAR-PER ASTM B633 TYPE III,SC1,HEX FREE	PLATING: 0.00020" - 0.00030"

USS/SAE LC Washers are manufactured to the requirements of ASTM F844 specifications
Chemistry is as reported from raw material certification and does not fall under Prestige Stamping's accreditation.
This product was produced under an IATF 16949 Quality Assurance System.
IATF 16949 Certification No: 800334.
Material was melted and manufactured in the U.S.A.
This product was manufactured in Warren, Michigan U.S.A.
This product conforms to all requirements for washers as produced according to ANSI/ASMI B18.22.1.
Mechanical properties and test methods for hardness conform to ASTM F436
Sampling Plan per P.S.I W.I. # 5.4.18.015.
The test results only apply to the items tested.
This test report must not be reproduced except in full without prior written approval.
Materials used to manufacture these products are mercury, asbestos and radio activity free.
Product is RoHS compliant.
No weld repairs made to material.
All certified product is AIS compliant.

FRANK SCHUBERT
Quality Assurance Manager

Econ Information System 05/28/20 09:57 CDUM PAGE 1 of 1

Figure D-7. $^{5}/_{16}$-in. Dia. Plain Round Washer, Test No. UCSS-4

FASTENAL®

Certificate of Compliance

Sold To:

UNL TRANSPORTATION/Midwest Roadside Safe

Purchase Order: UCSS

Job: item# c6

Invoice Date: 08/6/2020

THIS IS TO CERTIFY THAT WE HAVE SUPPLIED YOU WITH THE FOLLOWING PARTS.
THESE PARTS WERE PURCHASED TO THE FOLLOWING SPECIFICATIONS.

5 PCS 3/4 3/8 1/2 Chrome Spacer - OD/ID/Length SUPPLIED UNDER OUR TRACE NUMBER 210221332 AND UNDER PART NUMBER 0185761

This is to certify that the above document is true and accurate to the best of my knowledge.

Fastenal Account Representative Signature

Ross Schall

Printed Name

8-6-2020

Date

Please check current revision to avoid using obsolete copies.

This document was printed on 08/06/2020 and was current at that time.

Fastenal Store Location/Address

3201 N. 23rd Street STE 1
LINCOLN, NE 68521
Phone #: (402)476-7900
Fax #: 402/476-7958

Page 1 of 1

Figure D-8. 1-in. x ⅝-in. Post Spacer, Test No. UCSS-4

Appendix E. Test No. UCSS-7 Material Specifications

Table E-1. Bill of Materials, Test No. UCSS-7

Item No.	Description	Material Specification	Reference
a1	4.00 lb/ft U-Channel Sign Post, 96" Long	ASTM A499 Gr. 60	H#4400006934 and H#4400006937
a2	4.00 lb/ft U-Channel Sign Post, 42" Long	ASTM A499 Gr. 60	H#4400006934 and H#4400006937
b1	36"x36"x0.08" Sign with Reflective Sheeting	Aluminum Alloy 5052 or Similar	RTS-209590 COC
c1	$^{5}/_{16}$"-18 UNC, 2¾" Long Hex Bolt	SAE J429 Gr. 5 or 9	H#10229550
c2	$^{5}/_{16}$"-18 UNC, 2 ¼" Long Hex Bolt	SAE J429 Gr. 9	H#10242060
c3	$^{5}/_{16}$"-18 UNC Heavy Hex Nut	SAE J995 Gr. 5 or 9	H#10463770 P#11541092 PO#180159538
c4	$^{5}/_{16}$" Dia. Plain Round Washer	Low Carbon Steel	H#252887 PO#210228752
c5	⅜" Dia. Lock Washer	Low Carbon Steel	H#F890005507 P#133622 C#210166226
c6	¾"x ½" Post Spacer	As Supplied	H#192232

NUCOR

Mill Certification
09/03/2020

MTR#:483578-11
Lot #:440000693769
912 Cheney Avenue
Marion, OH 43302 US
800 333-4011
Fax: 740 383-6429

Sold To: GRIMCO INC
11745 SAPPINGTON BARRACKS RD
SUNSET HILLS, MO 63127 US

Ship To: SAN BAR CONSTRUCTION CORP AND SIGN MFG
JARRETT 877-392-9809
9101 BROADWAY BLVD SE
ALBUQUERQUE, NM 87105 US

Customer PO	1640182	Sales Order #	44004972 - 11.1
Product Group	U-Channel	Product #	1060378
Grade	SP80	Lot #	440000693769
Size	4#	Heat #	4400006937
BOL #	BOL-568786	Load #	483578
Description	U-Channel Rib-Bak 4 lbs/ft SP80 3' 6" [42"] Powder Coat - Green Taper One End 1" OC 3/8 FL 50 pcs	Customer Part #	
Production Date	08/26/2020	Qty Shipped LBS	7000
Product Country Of Origin	United States	Qty Shipped EA	500
Original Item Description		Original Item Number	

I hereby certify that the material described herein has been manufactured in accordance with the specifications and standards listed above and that it satisfies those requirements.

Melt Country of Origin : United States — Melting Date: 07/30/2020
Roll Country of Origin : United States — Rolling Date: 08/04/2020

C (%)	Mn (%)	P (%)	S (%)	Si (%)	Ni (%)	Cr (%)	Mo (%)	Cu (%)	Sn (%)
0.72	0.75	0.011	0.033	0.190	0.15	0.11	0.05	0.33	0.011

Other Test Results
Yield (PSI) : 88300 Tensile (PSI) : 147000 Elongation in 8" (%) : 11.0

Comments:

Material conforms to ASTM A1075; conforms to chemistry requirements of ASTM A1 and tensile requirements of ASTM A499.
All manufacturing processes of the steel materials in this product, including melting, have occurred within the United States.
All products produced are weld free. Mercury, in any form, has not been used in the production or testing of this material.

Ignatius Okafor, Division Metallurgist

Page 1 of 1

Figure E-1. 4.00 lb/ft U-Channel Sign Post, Test No. UCSS-7

NUCOR

Mill Certification
10/07/2020

MTR#:483577-8
Lot #:440000693465
912 Cheney Avenue
Marion, OH 43302 US
800 333-4011
Fax: 740 383-6429

Sold To: GRIMCO INC
11745 SAPPINGTON BARRACKS RD
SUNSET HILLS, MO 63127 US

Ship To: SAN BAR CONSTRUCTION CORP AND SIGN MFG
JARRETT 877-392-9809
9101 BROADWAY BLVD SE
ALBUQUERQUE, NM 87105 US

Customer PO	1640182	Sales Order #	44004972 - 3.1
Product Group	U-Channel	Product #	1060128
Grade	SP80	Lot #	440000693465
Size	4#	Heat #	4400006934
BOL #	BOL-569736	Load #	483577
Description	U-Channel Rib-Bak 4 lbs/ft SP80 10' 0" [120"] Powder Coat - Green No Taper 1" OC 3/8 FL 50 pcs	Customer Part #	
Production Date	08/27/2020	Qty Shipped LBS	8000
Product Country Of Origin	United States	Qty Shipped EA	200
Original Item Description		Original Item Number	

I hereby certify that the material described herein has been manufactured in accordance with the specifications and standards listed above and that it satisfies those requirements.

Melt Country of Origin : United States — Melting Date: 07/30/2020
Roll Country of Origin : United States — Rolling Date: 08/04/2020

C (%)	Mn (%)	P (%)	S (%)	Si (%)	Ni (%)	Cr (%)	Mo (%)	Cu (%)	Sn (%)
0.71	0.73	0.013	0.033	0.190	0.14	0.12	0.04	0.33	0.012

Other Test Results
Yield (PSI) : 88400 Tensile (PSI) : 141800 Elongation in 8" (%) : 6.0

Comments:

Material conforms to ASTM A1075; conforms to chemistry requirements of ASTM A1 and tensile requirements of ASTM A499.
All manufacturing processes of the steel materials in this product, including melting, have occurred within the United States.
All products produced are weld free. Mercury, in any form, has not been used in the production or testing of this material.

Ignatius Okafor, Division Metallurgist

Page 1 of 1

Figure E-2. 4.00 lb/ft U-Channel Sign Post, Test No. UCSS-7

SmartSign

300 Cadman Plaza West, ste 1303
Brooklyn NY 11201

9/28/2020

CERTIFICATE OF COMPLIANCE

Smartsign hereby certifies that all materials supplied against purchase order PO UCSS / RTS-209590shipped on 9/2/2020 conforms to the material and/ or manufacturing specifications as called on this said purchase order without expectations.

Item #
X-R5-1

Description: Engineer Grade Reflective Aluminum Sign, 80 mil

Sincerely,

Tahyna Colon
Call Center Manager
tahyna@smartsign.com
800-952-1457 x 7140

Figure E-3. 36-in. x 36-in. x 0.08-in. Sign with Reflective Sheeting, Test No. UCSS-7

LOAD

CHARTER STEEL

A Division of
Charter Manufacturing Company, Inc.

CHARTER STEEL TEST REPORT
Reverse Has Text And Codes

1658 Cold Springs Road
Saukville, Wisconsin 53080
(262) 268-2400
1-800-437-8789
FAX (262) 268-2570

Fastenal-West Hartford
61 Barnes Industrial Park North
Wallingford,CT-06492
Kind Attn :Mark Leone

Cust P.O.	350006957
Customer Part #	0970917
Charter Sales Order	30053773
Heat #	10229550
Ship Lot #	4182846
Grade	8640 R SK FG RHQ 3/8
Process	SA+SAFS
Finish Size	0.3265

I hereby certify that the material described herein has been manufactured in accordance with the specifications and standards listed below and on the reverse side,and that it satisfies these requirements.

Test Results of Heat Lot# 10229550

Lab Code: 7388

CHEM	C	MN	P	S	SI	NI	CR	MO	CU	SN	V
%Wt	.39	.85	.010	.007	.230	.44	.43	.22	.13	.009	.003
	AL	N	B	TI	NB						
	.025	.0060	.0001	.002	.002						

JOMINY(HRC)	JOM01	JOM02	JOM03	JOM04	JOM05	JOM06	JOM07	JOM08	JOM09	JOM10	JOM12
	56	56	56	53	52	48	46	44	43	41	38
	JOM14	JOM16	JOM18	JOM20	JOM24	JOM28	JOM32				
	36	34	33	32	30	28	27				

JOMINY SAMPLE TYPE ENGLISH = C
CHEM. DEVIATION EXT.-GREEN =

3-2359

Test Results of Rolling Lot# 1084924

REDUCTION RATIO = 274:1

Test Results of Processing Lot# 4182487,4182846

	# of Tests	Min Value	Max Value	Mean Value	
TENSILE	1.0	72.6	72.6	72.6	TENSILE LAB = 0358-02
REDUCTION OF AREA	1	76	76	76	RA LAB = 0358-02
ROCKWELL B	1	76	76	76	RB LAB = 0358-02

NUM DECARB = 1 FREE FERRITE DECARB = .000 FREE FERR & PARTIAL DECARB = .002

Specifications: Manufactured per Charter Steel Quality Manual Rev 9,08-01-09
Meets customer specifications with any applicable Charter Steel exceptions for the following customer documents:
Customer Document = QWI#23 - DETAIL 55 Revision = New Dated = 02-MAR-12

Additional Comments:

Charter Steel
Saukville, WI, USA

Rem: Load1,Fax0,Mail0

ACCREDITED Testing Laboratory

Page 1 of 1

This MTR supersedes all previously dated MTRs for this order

Janice Barnard
Manager of Quality Assurance
01/08/2013

Figure E-4. $^{5}/_{16}$-in., 2¾-in. Long Hex Bolt, Test No. UCSS-7

LOAD

CHARTER STEEL

A Division of
Charter Manufacturing Company, Inc.

CHARTER STEEL TEST REPORT
Reverse Has Text And Codes

1658 Cold Springs Road
Saukville, Wisconsin 53080
(262) 268-2400
1-800-437-8789
FAX (262) 268-2570

Fastenal-West Hartford
61 Barnes Industrial Park North
Wallingford,CT-06492
Kind Attn :Mark Leone

Cust P.O.	350007110
Customer Part #	0970917
Charter Sales Order	30054252
Heat #	10242060
Ship Lot #	4199470
Grade	8640 R SK FG RHQ 3/8
Process	SA+SAFS
Finish Size	0.3265

I hereby certify that the material described herein has been manufactured in accordance with the specifications and standards listed below and on the reverse side,and that it satisfies these requirements.

Test Results of Heat Lot# 10242060

Lab Code: 7388

CHEM	C	MN	P	S	SI	NI	CR	MO	CU	SN	V
%Wt	.38	.86	.010	.007	.220	.46	.42	.21	.17	.009	.003
	AL	N	B	TI	NB						
	.026	.0070	.0001	.001	.002						

JOMINY(HRC)	JOM01	JOM02	JOM03	JOM04	JOM05	JOM06	JOM07	JOM08	JOM09	JOM10	JOM12
	55	55	55	53	50	47	45	43	41	40	37
	JOM14	JOM16	JOM18	JOM20	JOM24	JOM28	JOM32				
	35	33	32	30	28	27	26				

JOMINY SAMPLE TYPE ENGLISH = C
CHEM. DEVIATION EXT.-GREEN =

3.2366

Test Results of Rolling Lot# 1090751

REDUCTION RATIO = 274:1

Test Results of Processing Lot# 4195387,4199470

	# of Tests	Min Value	Max Value	Mean Value	
TENSILE	1.0	72.2	72.2	72.2	TENSILE LAB = 0358-02
REDUCTION OF AREA	1	78	78	78	RA LAB = 0358-02
ROCKWELL B	1	77	77	77	RB LAB = 0358-02

NUM DECARB = 1 FREE FERRITE DECARB = .000 FREE FERR & PARTIAL DECARB = .002

Specifications: Manufactured per Charter Steel Quality Manual Rev 9,08-01-09
Meets customer specifications with any applicable Charter Steel exceptions for the following customer documents:
Customer Document = QWI#23 - DETAIL 55 Revision = New Dated = 02-MAR-12

Additional Comments:

Charter Steel
Saukville, WI, USA

Rem: Load1,Fax0,Mail0

ACCREDITED Page 1 of 1
Testing Laboratory

This MTR supersedes all previously dated MTRs for this order

Janice Barnard
Manager of Quality Assurance
04/02/2013

Figure E-5. $^{5}/_{16}$-in., 2¼-in. Long Hex Bolt, Test No. UCSS-7

ELGIN FASTENER GROUP
BEREA OHIO

MATERIAL CERTIFICATION

Customer: FASTENAL COMPANY 3833 AIRPORT RD. DENTON TX 76207			**Date:** 10/25/2018
	Customer P.O. Number:	180159538	
	Customer Part Number:	11541092	
	Invoice Number:	84821	
	Lot Number:	0072385-129135-129136	
Description: NUT THICK HEX 5/16-18 FNL9 ORG	**Ship Quantity:** 8000	**Ship Date:**	10/25/2018
	Material: 1038	**Heat Number:**	10463770
Specification:			

C	Mn	P	S	Si	Ni	Cr	Mo	Al
0.380	0.750	0.008	0.010	0.200	0.040	0.080	0.010	0.033

Hardness	C 36.1
Proof Load:	4 passed at 180,000 psi min
Plating	Geomet 321 + L - Pass

We hereby certify that to our actual knowledge the information contained herein is correct. We also certify that all parts substantially conform to SAE, ASTM, or customer specifications as agreed upon. The product has been manufactured and tested in accordance with our Quality Assurance manual. The above data accurately represents values provided by our suppliers or values generated in the EFG-BEREA laboratory. Statistical process control data is on file. All manufacturing processes for these parts occurred in the United States of America.
* Processed Mercury Free using material that is Free of Welds.

This document may only be reproduced without alteration and only for the purpose of certifying the quantity of the product specified here.

Joe Kilpatrick

Joe Kilpatrick
Quality Technician

Figure E-6. $^{5}/_{16}$-in. Heavy Hex Nut, Test No. UCSS-7

FNL Part#0159678

Prestige Stamping, LLC

23513 Groesbeck Highway
Warren, Michigan 48089
(586)773-2700 * Fax (586)773-2298
www.PrestigeStamping.com

PRODUCT CERTIFICATION

CERTIFICATION NUMBER

218380

THIS IS TO CERTIFY THE PRODUCT STATED BELOW WAS FABRICATED AND PROCESSED TO THE ORDER AS INDICATED AND CONFORMS TO THE APPLICABLE SPECIFICATIONS AND STANDARDS.

Customer: FASTENAL/EDWARDSVILLE
9911 WOODEND ROAD
EDWARDSVILLE, KS 66111
USA

Customer Part: 5/16"USS ZINC
Prestige Part: P0889MP00
Part Name: 5/16"USS ZINC RoHS COMPLIANT
Purchase Order: 210228752
Shipment BOL: B228034
Shipment ID: A0248877
Quantity: 12000
Manufacturers Marking: "P"

Steel Supplier: KENWAL STEEL CORP.
Grade: CSECONDARY STEEL
Lot: D9842
Heat: 252887
Carbon: .05
Manganese: .87
Phosphorous: .012
Sulfur: .002
Silicon: .02

SPECIFICATIONS	TEST RESULTS
PLATING: TEST METHOD: ASTM B499 0.00015" Min. ELELCTRO ZINC & TRIVALENT CLEAR-PER ASTM B633 TYPE III,SC1,HEX FREE	PLATING: 0.00020" - 0.00030"

USS/SAE LC Washers are manufactured to the requirements of ASTM F844 specifications
Chemistry is as reported from raw material certification and does not fall under Prestige Stamping's accreditation.
This product was produced under an IATF 16949 Quality Assurance System.
IATF 16949 Certification No: 800334.
Material was melted and manufactured in the U.S.A.
This product was manufactured in Warren, Michigan U.S.A.
This product conforms to all requirements for washers as produced according to ANSI/ASMI B18.22.1.
Mechanical properties and test methods for hardness conform to ASTM F436
Sampling Plan per P.S.I W.I. # 5.4.18.015.
The test results only apply to the items tested.
This test report must not be reproduced except in full without prior written approval.
Materials used to manufacture these products are mercury, asbestos and radio activity free.
Product is RoHS compliant.
No weld repairs made to material.
All certified product is AIS compliant.

FRANK SCHUBERT
Quality Assurance Manager

Econ Information System 09/17/20 09:58 RFOR PAGE 1 of 1

Figure E-7. $^{5}/_{16}$-in. Dia. Plain Round Washer, Test No. UCSS-7

HANGZHOU SPRING WASHER CO.,LTD

QUALITY TEST CERTIFICATE OF SPRING LOCK WASHER

Standard: ASME B 18.21.1-2009 Contract No.: 18HZW07392

Order No.: PO 210166226 Invoice No.: 18SHD395

Chemical Composition (%)	C	Si	Mn	P	S	Cr	Ni	Cu
	0.64	0.21	0.55	0.01	0.012	0.07	0.04	0.08
Heat No.	F890005507							

Specification	3/8" MECH	
Quantity	72 M	
Lot No.	1808061	
Part No.	133622	

Testing Item	Ac/n	Norm	Result	Reject	Norm	Result	Reject
Inside Diameter	2/100	9.58-9.78	9.62-9.78	0			
Outside Diameter	1/32	Max17.27	Max17.26	0			
Width	1/32	Min3.58	Min3.63	0			
Thickness	1/32	2.39-2.61	2.47-2.58	0			
Height							
Section							
Surface Defects	2/100	None	None	0			
Hardness	0/8	HRC38-46	HRC38-38.7	0			
Springing							
Toughness	0/8	Qualified	Qualified	0			

General:

The spring lock washers are conformed with the standard of ASME B 18.21.1-2009. QUALIFI

Inspector: Shiweiqing Quality Inspection Chief: Date: 2020.10.23

Figure E-8. ⅜-in. Dia. Lock Washer, Test No. UCSS-7

120 Park Street
Troy, MI 48083
Phone: 248-588-3000 Fax: 248-588-2526
Website: www.stainlessandaluminum.com

Certificate of Analysis and Testing

Customer: Rush Machine Inc.
256 Minnesota
Troy, MI 48083

PO Number: 15284
Order Number: 16362

Weight	Description		Heat Number
2,013.00	3/4" ROUND 12L14 X 12 FT	12L14	192232
TAGS:	87749 87750		

Analysis

B	C	N	Mg	Al	Si	P	S	Ca	Ti	V	Cr
0.0000	0.0700	0.0000	0.0000	0.0000	0.0400	0.0520	0.2950	0.0000	0.0000	0.0000	0.1000

Mn	Fe	Co	Ni	Cu	Zn	Nb/Cb	Mo	Cd	Sn	W	Pb
1.1500	0.0000	0.0000	0.0900	0.1900	0.0000	0.0000	0.0200	0.0000	0.0000	0.0000	0.2300

Mechanical Properties

Tensile PSI	Yield PSI	Elongation % 2 Inches	Reduction of Area %	Rockwell B Scale	Grain Size	Charpy F
0.00	0.00	0.00000	0.00000	0.00000	0.00000	0.00000

FREE OF MERCURY, NO WELD REPAIR. DFARS

Testing Procedures

ASTM A108-13, ASTM, A29/A29M-16

We hereby certify that the forgoing data is a true copy of the data furnished to us by our supplier or resulting from tests performed in a recognized laboratory.

Figure E-9. ¾-in. x ½-in. Post Spacer, Test No. UCSS-7

Appendix F. Test No. UCSS-5 Material Specifications

Table F-1. Bill of Materials, Test No. UCSS-5

Item No.	Description	Material Specification	Reference
a1	4.00 lb/ft U-Channel Sign Post, 154" Long	ASTM A499 Gr. 80	H#4400006934 and H#4400006937
b1	36"x36"x0.08" Sign with Reflective Sheeting	Aluminum Alloy 5052 or Similar	RTS-209590 COC
c1	$^{5}/_{16}$"-18 UNC, 2 3/4" Long Hex Bolt	SAE J429 Gr. 5 or 9	H#10229550
c2	$^{5}/_{16}$"-18 UNC Heavy Hex Nut	SAE J995 Gr. 5 or 9	H#10463770 P#11541092 PO#180159538
c3	⅜" Dia. Lock Washer	Low Carbon Steel	H#F890005507 P#133622 O#210166226
c4	$^{5}/_{16}$" Dia. Plain Round Washer	Low Carbon Steel	H#252887 PO#210228752

NUCOR

Mill Certification
10/07/2020

MTR#:483577-8
Lot #:440000693465
912 Cheney Avenue
Marion, OH 43302 US
800 333-4011
Fax: 740 383-6429

Sold To: GRIMCO INC
11745 SAPPINGTON BARRACKS RD
SUNSET HILLS, MO 63127 US

Ship To: SAN BAR CONSTRUCTION CORP AND SIGN MFG
JARRETT 877-392-9809
9101 BROADWAY BLVD SE
ALBUQUERQUE, NM 87105 US

Customer PO	1640182	Sales Order #	44004972 - 3.1
Product Group	U-Channel	Product #	1060128
Grade	SP80	Lot #	440000693465
Size	4#	Heat #	4400006934
BOL #	BOL-569736	Load #	483577
Description	U-Channel Rib-Bak 4 lbs/ft SP80 10' 0" [120"] Powder Coat - Green No Taper 1" OC 3/8 FL 50 pcs	Customer Part #	
Production Date	08/27/2020	Qty Shipped LBS	8000
Product Country Of Origin	United States	Qty Shipped EA	200
Original Item Description		Original Item Number	

I hereby certify that the material described herein has been manufactured in accordance with the specifications and standards listed above and that it satisfies those requirements.

Melt Country of Origin : United States — Melting Date: 07/30/2020
Roll Country of Origin : United States — Rolling Date: 08/04/2020

C (%)	Mn (%)	P (%)	S (%)	Si (%)	Ni (%)	Cr (%)	Mo (%)	Cu (%)	Sn (%)
0.71	0.73	0.013	0.033	0.190	0.14	0.12	0.04	0.33	0.012

Other Test Results
Yield (PSI) : 88400 Tensile (PSI) : 141800 Elongation in 8" (%) : 6.0

Comments:

Material conforms to ASTM A1075; conforms to chemistry requirements of ASTM A1 and tensile requirements of ASTM A499.
All manufacturing processes of the steel materials in this product, including melting, have occurred within the United States.
All products produced are weld free. Mercury, in any form, has not been used in the production or testing of this material.

Ignatius Okafor, Division Metallurgist

Page 1 of 1

Figure F-1. 4.00 lb/ft U-Channel Sign Post, Test No. UCSS-5

NUCOR

Mill Certification
09/03/2020

MTR#:483578-11
Lot #:440000693769
912 Cheney Avenue
Marion, OH 43302 US
800 333-4011
Fax: 740 383-6429

Sold To: GRIMCO INC
11745 SAPPINGTON BARRACKS RD
SUNSET HILLS, MO 63127 US

Ship To: SAN BAR CONSTRUCTION CORP AND SIGN MFG
JARRETT 877-392-9809
9101 BROADWAY BLVD SE
ALBUQUERQUE, NM 87105 US

Customer PO	1640182	Sales Order #	44004972 - 11.1
Product Group	U-Channel	Product #	1060378
Grade	SP80	Lot #	440000693769
Size	4#	Heat #	4400006937
BOL #	BOL-568786	Load #	483578
Description	U-Channel Rib-Bak 4 lbs/ft SP80 3' 6" [42"] Powder Coat - Green Taper One End 1" OC 3/8 FL 50 pcs	Customer Part #	
Production Date	08/26/2020	Qty Shipped LBS	7000
Product Country Of Origin	United States	Qty Shipped EA	500
Original Item Description		Original Item Number	

I hereby certify that the material described herein has been manufactured in accordance with the specifications and standards listed above and that it satisfies those requirements.

Melt Country of Origin : United States — Melting Date: 07/30/2020
Roll Country of Origin : United States — Rolling Date: 08/04/2020

C (%)	Mn (%)	P (%)	S (%)	Si (%)	Ni (%)	Cr (%)	Mo (%)	Cu (%)	Sn (%)
0.72	0.75	0.011	0.033	0.190	0.15	0.11	0.05	0.33	0.011

Other Test Results
Yield (PSI) : 88300 Tensile (PSI) : 147000 Elongation in 8" (%) : 11.0

Comments:

Material conforms to ASTM A1075; conforms to chemistry requirements of ASTM A1 and tensile requirements of ASTM A499.
All manufacturing processes of the steel materials in this product, including melting, have occurred within the United States.
All products produced are weld free. Mercury, in any form, has not been used in the production or testing of this material.

Ignatius Okafor, Division Metallurgist

Page 1 of 1

Figure F-2. 4.00 lb/ft U-Channel Sign Post, Test No. UCSS-5

SmartSign

300 Cadman Plaza West, ste 1303
Brooklyn NY 11201

9/28/2020

CERTIFICATE OF COMPLIANCE

Smartsign hereby certifies that all materials supplied against purchase order PO UCSS / RTS-209590shipped on 9/2/2020 conforms to the material and/ or manufacturing specifications as called on this said purchase order without expectations.

Item #
X-R5-1

Description: Engineer Grade Reflective Aluminum Sign, 80 mil

Sincerely,

Tahyna Colon
Call Center Manager
tahyna@smartsign.com
800-952-1457 x 7140

Figure F-3. 36-in. x 36-in. x 0.08-in. Sign with Reflective Sheeting, Test No. UCSS-5

LOAD

CHARTER STEEL

A Division of
Charter Manufacturing Company, Inc.

CHARTER STEEL TEST REPORT
Reverse Has Text And Codes

1658 Cold Springs Road
Saukville, Wisconsin 53080
(262) 268-2400
1-800-437-8789
FAX (262) 268-2570

Fastenal-West Hartford
61 Barnes Industrial Park North
Wallingford,CT-06492
Kind Attn :Mark Leone

Cust P.O.	350006957
Customer Part #	0970917
Charter Sales Order	30053773
Heat #	10229550
Ship Lot #	4182846
Grade	8640 R SK FG RHQ 3/8
Process	SA+SAFS
Finish Size	0.3265

I hereby certify that the material described herein has been manufactured in accordance with the specifications and standards listed below and on the reverse side,and that it satisfies these requirements.

Test Results of Heat Lot# 10229550

Lab Code: 7388

CHEM	C	MN	P	S	SI	NI	CR	MO	CU	SN	V
%Wt	.39	.85	.010	.007	.230	.44	.43	.22	.13	.009	.003
	AL	N	B	TI	NB						
	.025	.0060	.0001	.002	.002						

JOMINY(HRC)	JOM01	JOM02	JOM03	JOM04	JOM05	JOM06	JOM07	JOM08	JOM09	JOM10	JOM12
	56	56	56	53	52	48	46	44	43	41	38
	JOM14	JOM16	JOM18	JOM20	JOM24	JOM28	JOM32				
	36	34	33	32	30	28	27				

JOMINY SAMPLE TYPE ENGLISH = C
CHEM. DEVIATION EXT.-GREEN =

Test Results of Rolling Lot# 1084924

REDUCTION RATIO = 274:1

Test Results of Processing Lot# 4182487,4182846

	# of Tests	Min Value	Max Value	Mean Value	
TENSILE	1.0	72.6	72.6	72.6	TENSILE LAB = 0358-02
REDUCTION OF AREA	1	76	76	76	RA LAB = 0358-02
ROCKWELL B	1	76	76	76	RB LAB = 0358-02

NUM DECARB = 1 FREE FERRITE DECARB = .000 FREE FERR & PARTIAL DECARB = .002

Specifications: Manufactured per Charter Steel Quality Manual Rev 9,08-01-09
Meets customer specifications with any applicable Charter Steel exceptions for the following customer documents:
Customer Document = QWI#23 - DETAIL 55 Revision = New Dated = 02-MAR-12

Additional Comments:

3-2359

Charter Steel
Saukville, WI, USA

Rem: Load1,Fax0,Mail0

ACCREDITED Testing Laboratory

Page 1 of 1

This MTR supersedes all previously dated MTRs for this order

Janice Barnard
Manager of Quality Assurance
01/08/2013

Figure F-4. $^{5}/_{16}$-in., 2¾-in. Long Hex Bolt, Test No. UCSS-5

ELGIN FASTENER GROUP
BEREA OHIO

MATERIAL CERTIFICATION

Customer: FASTENAL COMPANY 3833 AIRPORT RD. DENTON TX 76207			**Date:** 10/25/2018
	Customer P.O. Number:	180159538	
	Customer Part Number:	11541092	
	Invoice Number:	84821	
	Lot Number:	0072385-129135-129136	
Description: NUT THICK HEX 5/16-18 FNL9 ORG	**Ship Quantity:** 8000	**Ship Date:**	10/25/2018
	Material: 1038	**Heat Number:**	10463770
Specification:			

C	Mn	P	S	Si	Ni	Cr	Mo	Al
0.380	0.750	0.008	0.010	0.200	0.040	0.080	0.010	0.033

Hardness	C 36.1
Proof Load:	4 passed at 180,000 psi min
Plating	Geomet 321 + L - Pass

We hereby certify that to our actual knowledge the information contained herein is correct. We also certify that all parts substantially conform to SAE, ASTM, or customer specifications as agreed upon. The product has been manufactured and tested in accordance with our Quality Assurance manual. The above data accurately represents values provided by our suppliers or values generated in the EFG-BEREA laboratory. Statistical process control data is on file. All manufacturing processes for these parts occurred in the United States of America.
* Processed Mercury Free using material that is Free of Welds.

This document may only be reproduced without alteration and only for the purpose of certifying the quantity of the product specified here.

Joe Kilpatrick

Joe Kilpatrick
Quality Technician

Figure F-5. $^{5}/_{16}$-in. Heavy Hex Nut, Test No. UCSS-5

HANGZHOU SPRING WASHER CO.,LTD

QUALITY TEST CERTIFICATE OF SPRING LOCK WASHER

Standard: ASME B 18.21.1-2009 Contract No.: 18HZW07392

Order No.: PO 210166226 Invoice No.: 18SHD395

Chemical Composition (%)	C	Si	Mn	P	S	Cr	Ni	Cu
	0.64	0.21	0.55	0.01	0.012	0.07	0.04	0.08
Heat No.	F890005507							

Specification	3/8" MECH	
Quantity	72 M	
Lot No.	1808061	
Part No.	133622	

Testing Item	Ac/n	Norm	Result	Reject	Norm	Result	Reject
Inside Diameter	2/100	9.58-9.78	9.62-9.78	0			
Outside Diameter	1/32	Max17.27	Max17.26	0			
Width	1/32	Min3.58	Min3.63	0			
Thickness	1/32	2.39-2.64	2.47-2.58	0			
Height							
Section							
Surface Defects	2/100	None	None	0			
Hardness	0/8	HRC38-46	HRC38-38.7	0			
Springing							
Toughness	0/8	Qualified	Qualified	0			

General:

The spring lock washers are conformed with the standard of ASME B 18.21.1-2009. QUALIFI

杭州弹簧垫圈有限公司 质检专用章

Inspector: Shiweiqing Quality Inspection Chief: Date: 2020.10.23

Figure F-6. ⅜-in. Dia. Lock Washer, Test No. UCSS-5

FNL Part#0159678

Prestige Stamping, LLC

23513 Groesbeck Highway
Warren, Michigan 48089
(586)773-2700 * Fax (586)773-2298
www.PrestigeStamping.com

PRODUCT CERTIFICATION

CERTIFICATION NUMBER

218380

THIS IS TO CERTIFY THE PRODUCT STATED BELOW WAS FABRICATED AND PROCESSED TO THE ORDER AS INDICATED AND CONFORMS TO THE APPLICABLE SPECIFICATIONS AND STANDARDS.

Customer: FASTENAL/EDWARDSVILLE
9911 WOODEND ROAD
EDWARDSVILLE, KS 66111
USA

Customer Part: 5/16"USS ZINC
Prestige Part: P0889MP00
Part Name: 5/16"USS ZINC RoHS COMPLIANT
Purchase Order: 210228752
Shipment BOL: B228034
Shipment ID: A0248877
Quantity: 12000
Manufacturers Marking: "P"

Steel Supplier: KENWAL STEEL CORP.
Grade: CSECONDARY STEEL
Lot: D9842
Heat: 252887
Carbon: .05
Manganese: .87
Phosphorous: .012
Sulfur: .002
Silicon: .02

SPECIFICATIONS	TEST RESULTS
PLATING: TEST METHOD: ASTM B499 0.00015" Min. ELELCTRO ZINC & TRIVALENT CLEAR-PER ASTM B633 TYPE III,SC1,HEX FREE	PLATING: 0.00020" - 0.00030"

USS/SAE LC Washers are manufactured to the requirements of ASTM F844 specifications
Chemistry is as reported from raw material certification and does not fall under Prestige Stamping's accreditation.
This product was produced under an IATF 16949 Quality Assurance System.
IATF 16949 Certification No: 800334.
Material was melted and manufactured in the U.S.A.
This product was manufactured in Warren, Michigan U.S.A.
This product conforms to all requirements for washers as produced according to ANSI/ASMI B18.22.1.
Mechanical properties and test methods for hardness conform to ASTM F436
Sampling Plan per P.S.I W.I. # 5.4.18.015.
The test results only apply to the items tested.
This test report must not be reproduced except in full without prior written approval.
Materials used to manufacture these products are mercury, asbestos and radio activity free.
Product is RoHS compliant.
No weld repairs made to material.
All certified product is AIS compliant.

FRANK SCHUBERT
Quality Assurance Manager

Econ Information System 09/17/20 09:58 RFOR PAGE 1 of 1

Figure F-7. $^{5}/_{16}$-in. Dia. Plain Round Washer, Test No. UCSS-5

Appendix G. Test No. UCSS-6 Material Specifications

Table G-1. Bill of Materials, Test No. UCSS-6

Item No.	Description	Material Specification	Reference
a1	4.00 lb/ft U-Channel Sign Post, 120" Long	ASTM A499 Gr. 80	H#4400006934 and H#4400006937
b1	36"x36"x0.08" Sign with Reflective Sheeting	Aluminum Alloy 5052 or Similar	RTS-209590 COC
c1	$^{5}/_{16}$"-18 UNC, 2 3/4" Long Hex Bolt	SAE J429 Gr. 5 or 9	H#10229550
c2	$^{5}/_{16}$"-18 UNC Heavy Hex Nut	SAE J995 Gr. 5 or 9	H#10463770 P#11541092 PO#180159538
c3	⅜" Dia. Lock Washer	Low Carbon Steel	H#F890005507 P#133622 PO#210166226
c4	$^{5}/_{16}$" Dia. Plain Round Washer	Low Carbon Steel	H#252887 PO#210228752

NUCOR

Mill Certification
10/07/2020

MTR#:483577-8
Lot #:440000693465
912 Cheney Avenue
Marion, OH 43302 US
800 333-4011
Fax: 740 383-6429

Sold To: GRIMCO INC
11745 SAPPINGTON BARRACKS RD
SUNSET HILLS, MO 63127 US

Ship To: SAN BAR CONSTRUCTION CORP AND SIGN MFG
JARRETT 877-392-9809
9101 BROADWAY BLVD SE
ALBUQUERQUE, NM 87105 US

Customer PO	1640182	Sales Order #	44004972 - 3.1
Product Group	U-Channel	Product #	1060128
Grade	SP80	Lot #	440000693465
Size	4#	Heat #	4400006934
BOL #	BOL-569736	Load #	483577
Description	U-Channel Rib-Bak 4 lbs/ft SP80 10' 0" [120"] Powder Coat - Green No Taper 1" OC 3/8 FL 50 pcs	Customer Part #	
Production Date	08/27/2020	Qty Shipped LBS	8000
Product Country Of Origin	United States	Qty Shipped EA	200
Original Item Description		Original Item Number	

I hereby certify that the material described herein has been manufactured in accordance with the specifications and standards listed above and that it satisfies those requirements.

Melt Country of Origin : United States — Melting Date: 07/30/2020
Roll Country of Origin : United States — Rolling Date: 08/04/2020

C (%)	Mn (%)	P (%)	S (%)	Si (%)	Ni (%)	Cr (%)	Mo (%)	Cu (%)	Sn (%)
0.71	0.73	0.013	0.033	0.190	0.14	0.12	0.04	0.33	0.012

Other Test Results
Yield (PSI) : 88400 Tensile (PSI) : 141800 Elongation in 8" (%) : 6.0

Comments:

Material conforms to ASTM A1075; conforms to chemistry requirements of ASTM A1 and tensile requirements of ASTM A499.
All manufacturing processes of the steel materials in this product, including melting, have occurred within the United States.
All products produced are weld free. Mercury, in any form, has not been used in the production or testing of this material.

Ignatius Okafor, Division Metallurgist

Page 1 of 1

Figure G-1. 4.00 lb/ft U-Channel Sign Post, Test No. UCSS-6

NUCOR

Mill Certification
09/03/2020

MTR#:483578-11
Lot #:440000693769
912 Cheney Avenue
Marion, OH 43302 US
800 333-4011
Fax: 740 383-6429

Sold To: GRIMCO INC
11745 SAPPINGTON BARRACKS RD
SUNSET HILLS, MO 63127 US

Ship To: SAN BAR CONSTRUCTION CORP AND SIGN MFG
JARRETT 877-392-9809
9101 BROADWAY BLVD SE
ALBUQUERQUE, NM 87105 US

Customer PO	1640182	Sales Order #	44004972 - 11.1
Product Group	U-Channel	Product #	1060378
Grade	SP80	Lot #	440000693769
Size	4#	Heat #	4400006937
BOL #	BOL-568786	Load #	483578
Description	U-Channel Rib-Bak 4 lbs/ft SP80 3' 6" [42"] Powder Coat - Green Taper One End 1" OC 3/8 FL 50 pcs	Customer Part #	
Production Date	08/26/2020	Qty Shipped LBS	7000
Product Country Of Origin	United States	Qty Shipped EA	500
Original Item Description		Original Item Number	

I hereby certify that the material described herein has been manufactured in accordance with the specifications and standards listed above and that it satisfies those requirements.

Melt Country of Origin : United States — Melting Date: 07/30/2020
Roll Country of Origin : United States — Rolling Date: 08/04/2020

C (%)	Mn (%)	P (%)	S (%)	Si (%)	Ni (%)	Cr (%)	Mo (%)	Cu (%)	Sn (%)
0.72	0.75	0.011	0.033	0.190	0.15	0.11	0.05	0.33	0.011

Other Test Results
Yield (PSI) : 88300 Tensile (PSI) : 147000 Elongation in 8" (%) : 11.0

Comments:

Material conforms to ASTM A1075; conforms to chemistry requirements of ASTM A1 and tensile requirements of ASTM A499.
All manufacturing processes of the steel materials in this product, including melting, have occurred within the United States.
All products produced are weld free. Mercury, in any form, has not been used in the production or testing of this material.

Ignatius Okafor, Division Metallurgist

Page 1 of 1

Figure G-2. 4.00 lb/ft U-Channel Sign Post, Test No. UCSS-6

SmartSign

300 Cadman Plaza West, ste 1303
Brooklyn NY 11201

9/28/2020

CERTIFICATE OF COMPLIANCE

Smartsign hereby certifies that all materials supplied against purchase order PO UCSS / RTS-209590shipped on 9/2/2020 conforms to the material and/ or manufacturing specifications as called on this said purchase order without expectations.

Item #
X-R5-1

Description: Engineer Grade Reflective Aluminum Sign, 80 mil

Sincerely,

Tahyna Colon
Call Center Manager
tahyna@smartsign.com
800-952-1457 x 7140

Figure G-3. 36-in. x 36-in. x 0.08-in. Sign with Reflective Sheeting, Test No. UCSS-6

LOAD

CHARTER STEEL

A Division of
Charter Manufacturing Company, Inc.

CHARTER STEEL TEST REPORT
Reverse Has Text And Codes

1658 Cold Springs Road
Saukville, Wisconsin 53080
(262) 268-2400
1-800-437-8789
FAX (262) 268-2570

Fastenal-West Hartford
61 Barnes Industrial Park North
Wallingford,CT-06492
Kind Attn :Mark Leone

Cust P.O.	350006957
Customer Part #	0970917
Charter Sales Order	30053773
Heat #	10229550
Ship Lot #	4182846
Grade	8640 R SK FG RHQ 3/8
Process	SA+SAFS
Finish Size	0.3265

I hereby certify that the material described herein has been manufactured in accordance with the specifications and standards listed below and on the reverse side,and that it satisfies these requirements.

Test Results of Heat Lot# 10229550

Lab Code: 7388

CHEM	C	MN	P	S	SI	NI	CR	MO	CU	SN	V
%Wt	.39	.85	.010	.007	.230	.44	.43	.22	.13	.009	.003

	AL	N	B	TI	NB
	.025	.0060	.0001	.002	.002

JOMINY(HRC)	JOM01	JOM02	JOM03	JOM04	JOM05	JOM06	JOM07	JOM08	JOM09	JOM10	JOM12
	56	56	56	53	52	48	46	44	43	41	38

	JOM14	JOM16	JOM18	JOM20	JOM24	JOM28	JOM32
	36	34	33	32	30	28	27

JOMINY SAMPLE TYPE ENGLISH = C
CHEM. DEVIATION EXT.-GREEN =

3-2359

Test Results of Rolling Lot# 1084924

REDUCTION RATIO = 274:1

Test Results of Processing Lot# 4182487,4182846

	# of Tests	Min Value	Max Value	Mean Value	
TENSILE	1.0	72.6	72.6	72.6	TENSILE LAB = 0358-02
REDUCTION OF AREA	1	76	76	76	RA LAB = 0358-02
ROCKWELL B	1	76	76	76	RB LAB = 0358-02

NUM DECARB = 1 FREE FERRITE DECARB = .000 FREE FERR & PARTIAL DECARB = .002

Specifications: Manufactured per Charter Steel Quality Manual Rev 9,08-01-09
Meets customer specifications with any applicable Charter Steel exceptions for the following customer documents:
Customer Document = QWI#23 - DETAIL 55 Revision = New Dated = 02-MAR-12

Additional Comments:

Charter Steel
Saukville, WI, USA

Rem: Load1,Fax0,Mail0

ACCREDITED Testing Laboratory

Page 1 of 1

This MTR supersedes all previously dated MTRs for this order

Janice Barnard
Manager of Quality Assurance
01/08/2013

Figure G-4. $^{5}/_{16}$-in. -18, 2¾-in. Long Hex Bolt, Test No. UCSS-6

ELGIN FASTENER GROUP
BEREA OHIO

MATERIAL CERTIFICATION

Customer: FASTENAL COMPANY 3833 AIRPORT RD. DENTON TX 76207		**Date:** 10/25/2018
	Customer P.O. Number:	180159538
	Customer Part Number:	11541092
	Invoice Number:	84821
	Lot Number:	0072385-129135-129136
Description: NUT THICK HEX 5/16-18 FNL9 ORG	**Ship Quantity:** 8000	**Ship Date:** 10/25/2018
	Material: 1038	**Heat Number:** 10463770
Specification:		

C	Mn	P	S	Si	Ni	Cr	Mo	Al
0.380	0.750	0.008	0.010	0.200	0.040	0.080	0.010	0.033

Hardness	C 36.1
Proof Load:	4 passed at 180,000 psi min
Plating	Geomet 321 + L - Pass

We hereby certify that to our actual knowledge the information contained herein is correct. We also certify that all parts substantially conform to SAE, ASTM, or customer specifications as agreed upon. The product has been manufactured and tested in accordance with our Quality Assurance manual. The above data accurately represents values provided by our suppliers or values generated in the EFG-BEREA laboratory. Statistical process control data is on file. All manufacturing processes for these parts occurred in the United States of America.
* Processed Mercury Free using material that is Free of Welds.

This document may only be reproduced without alteration and only for the purpose of certifying the quantity of the product specified here.

Joe Kilpatrick

Joe Kilpatrick
Quality Technician

Figure G-5. $^{5}/_{16}$-in. Heavy Hex Nut, Test No. UCSS-6

HANGZHOU SPRING WASHER CO.,LTD

QUALITY TEST CERTIFICATE OF SPRING LOCK WASHER

Standard: ASME B 18.21.1-2009 Contract No.: 18HZW07392

Order No.: PO 210166226 Invoice No.: 18SHD395

Chemical Composition (%)	C	Si	Mn	P	S	Cr	Ni	Cu
	0.64	0.21	0.55	0.01	0.012	0.07	0.04	0.08
Heat No.	F890005507							

Specification	3/8" MECH	
Quantity	72 M	
Lot No.	1808061	
Part No.	133622	

Testing Item	Ac/n	Norm	Result	Reject	Norm	Result	Reject
Inside Diameter	2/100	9.58-9.78	9.62-9.78	0			
Outside Diameter	1/32	Max17.27	Max17.26	0			
Width	1/32	Min3.58	Min3.63	0			
Thickness	1/32	2.39-2.64	2.47-2.58	0			
Height							
Section							
Surface Defects	2/100	None	None	0			
Hardness	0/8	HRC38-46	HRC38-38.7	0			
Springing							
Toughness	0/8	Qualified	Qualified	0			

General:

The spring lock washers are conformed with the standard of ASME B 18.21.1-2009. QUALIFI

杭州弹簧垫圈有限公司 质检专用章

Inspector: Shiweiqing Quality Inspection Chief: Date: 2020.10.23

Figure G-6. ⅜-in. Dia. Lock Washer, Test No. UCSS-6

FNL Part#0159678

Prestige Stamping, LLC

23513 Groesbeck Highway
Warren, Michigan 48089
(586)773-2700 * Fax (586)773-2298
www.PrestigeStamping.com

PRODUCT CERTIFICATION

CERTIFICATION NUMBER

218380

THIS IS TO CERTIFY THE PRODUCT STATED BELOW WAS FABRICATED AND PROCESSED TO THE ORDER AS INDICATED AND CONFORMS TO THE APPLICABLE SPECIFICATIONS AND STANDARDS.

Customer: FASTENAL/EDWARDSVILLE
9911 WOODEND ROAD
EDWARDSVILLE, KS 66111
USA

Customer Part: 5/16"USS ZINC
Prestige Part: P0889MP00
Part Name: 5/16"USS ZINC RoHS COMPLIANT
Purchase Order: 210228752
Shipment BOL: B228034
Shipment ID: A0248877
Quantity: 12000
Manufacturers Marking: "P"

Steel Supplier: KENWAL STEEL CORP.
Grade: CSECONDARY STEEL
Lot: D9842
Heat: 252887
Carbon: .05
Manganese: .87
Phosphorous: .012
Sulfur: .002
Silicon: .02

SPECIFICATIONS	TEST RESULTS
PLATING: TEST METHOD: ASTM B499 0.00015" Min. ELELCTRO ZINC & TRIVALENT CLEAR-PER ASTM B633 TYPE III,SC1,HEX FREE	PLATING: 0.00020" - 0.00030"

USS/SAE LC Washers are manufactured to the requirements of ASTM F844 specifications
Chemistry is as reported from raw material certification and does not fall under Prestige Stamping's accreditation.
This product was produced under an IATF 16949 Quality Assurance System.
IATF 16949 Certification No: 800334.
Material was melted and manufactured in the U.S.A.
This product was manufactured in Warren, Michigan U.S.A.
This product conforms to all requirements for washers as produced according to ANSI/ASMI B18.22.1.
Mechanical properties and test methods for hardness conform to ASTM F436
Sampling Plan per P.S.I W.I. # 5.4.18.015.
The test results only apply to the items tested.
This test report must not be reproduced except in full without prior written approval.
Materials used to manufacture these products are mercury, asbestos and radio activity free.
Product is RoHS compliant.
No weld repairs made to material.
All certified product is AIS compliant.

FRANK SCHUBERT
Quality Assurance Manager

Econ Information System 09/17/20 09:58 RFOR PAGE 1 of 1

Figure G-7. $^{5}/_{16}$-in. Dia. Plain Round Washer, Test No. UCSS-6

Appendix H. Test No. UCSS-8 Material Specifications

Table H-1. Bill of Materials, Test No. UCSS-8

Item No.	Description	Material Specification	Reference
a1	3.00 lb/ft U-Channel Sign Post, 120" Long	ASTM A499 Gr. 60	H#4400006913 H#4400006906
a2	3.00 lb/ft U-Channel Sign Post, 42" Long	ASTM A499 Gr. 60	H#4400006913 H#4400006906
b1	36"x36"x0.08" Sign with Reflective Sheeting	Aluminum Alloy 5052 or Similar	RTS-209590 COC
c1	$^{5}/_{16}$"-18 UNC, 2¾" Long Hex Bolt	SAE J429 Gr. 5 or 9	H#10229550
c2	$^{5}/_{16}$"-18 UNC, 2¼" Long Hex Bolt	SAE J429 Gr. 9	H#10242060
c3	$^{5}/_{16}$"-18 UNC Heavy Hex Nut	SAE J995 Gr. 5 or 9	H#10463770 P#11541092 PO#180159538
c4	⅜" Dia. Lock Washer	Low Carbon Steel	H#F890005507 P#133622 PO#210166226
c5	$^{5}/_{16}$" Dia. Plain Round Washer	Low Carbon Steel	H#252887 P#0159678 PO#210228752
c6	¾"x½" Post Spacer	As Supplied	H#192232

NUCOR

Mill Certification
10/07/2020

MTR#:483577-8
Lot #:440000690681
912 Cheney Avenue
Marion, OH 43302 US
800 333-4011
Fax: 740 383-6429

Sold To: GRIMCO INC
11745 SAPPINGTON BARRACKS RD
SUNSET HILLS, MO 63127 US

Ship To: SAN BAR CONSTRUCTION CORP AND SIGN MFG
JARRETT 877-392-9809
9101 BROADWAY BLVD SE
ALBUQUERQUE, NM 87105 US

Customer PO	1640182	Sales Order #	44004972 - 2.1
Product Group	U-Channel	Product #	1060162
Grade	SP80	Lot #	440000690681
Size	3#	Heat #	4400006906
BOL #	BOL-569736	Load #	483577
Description	U-Channel Rib-Bak 3 lbs/ft SP80 10' 0" [120"] Powder Coat - Green No Taper 1" OC 3/8 FL 50 pcs	Customer Part #	
Production Date	08/26/2020	Qty Shipped LBS	3000
Product Country Of Origin	United States	Qty Shipped EA	100
Original Item Description		Original Item Number	

I hereby certify that the material described herein has been manufactured in accordance with the specifications and standards listed above and that it satisfies those requirements.

Melt Country of Origin : United States Melting Date: 07/27/2020

C (%)	Mn (%)	P (%)	S (%)	Si (%)	Ni (%)	Cr (%)	Mo (%)	Cu (%)	Sn (%)
0.71	0.83	0.006	0.027	0.220	0.09	0.14	0.02	0.30	0.010

Other Test Results
Yield (PSI) : 92600 Tensile (PSI) : 148100 Elongation in 8" (%) : 10.0

Comments:

Material conforms to ASTM A1075; conforms to chemistry requirements of ASTM A1 and tensile requirements of ASTM A499.
All manufacturing processes of the steel materials in this product, including melting, have occurred within the United States.
All products produced are weld free. Mercury, in any form, has not been used in the production or testing of this material.

Ignatius Okafor, Division Metallurgist

Page 1 of 1

Figure H-1. 3.00 lb/ft U-Channel Sign Post, Test No. UCSS-8

NUCOR

Mill Certification
09/03/2020

MTR#:483578-11
Lot #:440000691371
912 Cheney Avenue
Marion, OH 43302 US
800 333-4011
Fax: 740 383-6429

Sold To: GRIMCO INC
11745 SAPPINGTON BARRACKS RD
SUNSET HILLS, MO 63127 US

Ship To: SAN BAR CONSTRUCTION CORP AND SIGN MFG
JARRETT 877-392-9809
9101 BROADWAY BLVD SE
ALBUQUERQUE, NM 87105 US

Customer PO	1640182	Sales Order #	44004972 - 10.1
Product Group	U-Channel	Product #	1060317
Grade	SP80	Lot #	440000691371
Size	3#	Heat #	4400006913
BOL #	BOL-568786	Load #	483578
Description	U-Channel Rib-Bak 3 lbs/ft SP80 3' 6" [42"] Powder Coat - Green Taper One End 1" OC 3/8 FL 50 pcs	Customer Part #	
Production Date	08/19/2020	Qty Shipped LBS	1050
Product Country Of Origin	United States	Qty Shipped EA	100
Original Item Description		Original Item Number	

I hereby certify that the material described herein has been manufactured in accordance with the specifications and standards listed above and that it satisfies those requirements.

Melt Country of Origin : United States — Melting Date: 07/27/2020
Roll Country of Origin : United States — Rolling Date: 08/04/2020

C (%)	Mn (%)	P (%)	S (%)	Si (%)	Ni (%)	Cr (%)	Mo (%)	Cu (%)	Sn (%)
0.72	0.90	0.010	0.029	0.180	0.11	0.17	0.03	0.26	0.009

Other Test Results
Yield (PSI) : 94000 — Tensile (PSI) : 134900 — Elongation in 8" (%) : 5.0

Comments:

Material conforms to ASTM A1075; conforms to chemistry requirements of ASTM A1 and tensile requirements of ASTM A499.
All manufacturing processes of the steel materials in this product, including melting, have occurred within the United States.
All products produced are weld free. Mercury, in any form, has not been used in the production or testing of this material.

Ignatius Okafor, Division Metallurgist

Page 1 of 1

Figure H-2. 3.00 lb/ft U-Channel Sign Post, Test No. UCSS-8

SmartSign

300 Cadman Plaza West, ste 1303
Brooklyn NY 11201

9/28/2020

CERTIFICATE OF COMPLIANCE

Smartsign hereby certifies that all materials supplied against purchase order PO UCSS / RTS-209590shipped on 9/2/2020 conforms to the material and/ or manufacturing specifications as called on this said purchase order without expectations.

Item #
X-R5-1

Description: Engineer Grade Reflective Aluminum Sign, 80 mil

Sincerely,

Tahyna Colon
Call Center Manager
tahyna@smartsign.com
800-952-1457 x 7140

Figure H-3. 36-in. x 36-in. x 0.08-in. Sign with Reflective Sheeting, Test No. UCSS-8

LOAD

CHARTER STEEL

A Division of
Charter Manufacturing Company, Inc.

CHARTER STEEL TEST REPORT
Reverse Has Text And Codes

1658 Cold Springs Road
Saukville, Wisconsin 53080
(262) 268-2400
1-800-437-8789
FAX (262) 268-2570

Fastenal-West Hartford
61 Barnes Industrial Park North
Wallingford,CT-06492
Kind Attn :Mark Leone

Cust P.O.	350006957
Customer Part #	0970917
Charter Sales Order	30053773
Heat #	10229550
Ship Lot #	4182846
Grade	8640 R SK FG RHQ 3/8
Process	SA+SAFS
Finish Size	0.3265

I hereby certify that the material described herein has been manufactured in accordance with the specifications and standards listed below and on the reverse side,and that it satisfies these requirements.

Test Results of Heat Lot# 10229550

Lab Code: 7388

CHEM	C	MN	P	S	SI	NI	CR	MO	CU	SN	V
%Wt	.39	.85	.010	.007	.230	.44	.43	.22	.13	.009	.003
	AL	N	B	TI	NB						
	.025	.0060	.0001	.002	.002						

JOMINY(HRC)	JOM01	JOM02	JOM03	JOM04	JOM05	JOM06	JOM07	JOM08	JOM09	JOM10	JOM12
	56	56	56	53	52	48	46	44	43	41	38
	JOM14	JOM16	JOM18	JOM20	JOM24	JOM28	JOM32				
	36	34	33	32	30	28	27				

JOMINY SAMPLE TYPE ENGLISH = C
CHEM. DEVIATION EXT.-GREEN =

3-2359

Test Results of Rolling Lot# 1084924

REDUCTION RATIO = 274:1

Test Results of Processing Lot# 4182487,4182846

	# of Tests	Min Value	Max Value	Mean Value	
TENSILE	1.0	72.6	72.6	72.6	TENSILE LAB = 0358-02
REDUCTION OF AREA	1	76	76	76	RA LAB = 0358-02
ROCKWELL B	1	76	76	76	RB LAB = 0358-02

NUM DECARB = 1 FREE FERRITE DECARB = .000 FREE FERR & PARTIAL DECARB = .002

Specifications: Manufactured per Charter Steel Quality Manual Rev 9,08-01-09
Meets customer specifications with any applicable Charter Steel exceptions for the following customer documents:
Customer Document = QWI#23 - DETAIL 55 Revision = New Dated = 02-MAR-12

Additional Comments:

Charter Steel
Saukville, WI, USA

Rem: Load1,Fax0,Mail0

ACCREDITED Testing Laboratory

Page 1 of 1

This MTR supersedes all previously dated MTRs for this order

Janice Barnard
Manager of Quality Assurance
01/08/2013

Figure H-4. $^{5}/_{16}$-in., 2¾-in. Long Hex Bolt, Test No. UCSS-8

LOAD

CHARTER STEEL

A Division of
Charter Manufacturing Company, Inc.

CHARTER STEEL TEST REPORT
Reverse Has Text And Codes

1658 Cold Springs Road
Saukville, Wisconsin 53080
(262) 268-2400
1-800-437-8789
FAX (262) 268-2570

Fastenal-West Hartford
61 Barnes Industrial Park North
Wallingford,CT-06492
Kind Attn :Mark Leone

Cust P.O.	350007110
Customer Part #	0970917
Charter Sales Order	30054252
Heat #	10242060
Ship Lot #	4199470
Grade	8640 R SK FG RHQ 3/8
Process	SA+SAFS
Finish Size	0.3265

I hereby certify that the material described herein has been manufactured in accordance with the specifications and standards listed below and on the reverse side,and that it satisfies these requirements.

Test Results of Heat Lot# 10242060

Lab Code: 7388

CHEM	C	MN	P	S	SI	NI	CR	MO	CU	SN	V
%Wt	.38	.86	.010	.007	.220	.46	.42	.21	.17	.009	.003
	AL	N	B	TI	NB						
	.026	.0070	.0001	.001	.002						

JOMINY(HRC)	JOM01	JOM02	JOM03	JOM04	JOM05	JOM06	JOM07	JOM08	JOM09	JOM10	JOM12
	55	55	55	53	50	47	45	43	41	40	37
	JOM14	JOM16	JOM18	JOM20	JOM24	JOM28	JOM32				
	35	33	32	30	28	27	26				

JOMINY SAMPLE TYPE ENGLISH = C
CHEM. DEVIATION EXT.-GREEN =

3.2366

Test Results of Rolling Lot# 1090751

REDUCTION RATIO = 274:1

Test Results of Processing Lot# 4195387,4199470

	# of Tests	Min Value	Max Value	Mean Value	
TENSILE	1.0	72.2	72.2	72.2	TENSILE LAB = 0358-02
REDUCTION OF AREA	1	78	78	78	RA LAB = 0358-02
ROCKWELL B	1	77	77	77	RB LAB = 0358-02

NUM DECARB = 1 FREE FERRITE DECARB = .000 FREE FERR & PARTIAL DECARB = .002

Specifications: Manufactured per Charter Steel Quality Manual Rev 9,08-01-09
Meets customer specifications with any applicable Charter Steel exceptions for the following customer documents:
Customer Document = QWI#23 - DETAIL 55 Revision = New Dated = 02-MAR-12

Additional Comments:

Charter Steel
Saukville, WI, USA

Rem: Load1,Fax0,Mail0

ACCREDITED Page 1 of 1
Testing Laboratory

This MTR supersedes all previously dated MTRs for this order

Janice Barnard
Manager of Quality Assurance
04/02/2013

Figure H-5. $^{5}/_{16}$-in., 2¼-in. Long Hex Bolt, Test No. UCSS-8

ELGIN FASTENER GROUP
BEREA INC

MATERIAL CERTIFICATION

Customer: FASTENAL COMPANY 3833 AIRPORT RD. DENTON TX 76207		**Date:** 10/25/2018
	Customer P.O. Number:	180159538
	Customer Part Number:	11541092
	Invoice Number:	84821
	Lot Number:	0072385-129135-129136
Description: NUT THICK HEX 5/16-18 FNL9 ORG	**Ship Quantity:** 8000	**Ship Date:** 10/25/2018
	Material: 1038	**Heat Number:** 10463770
Specification:		

C	Mn	P	S	Si	Ni	Cr	Mo	Al
0.380	0.750	0.008	0.010	0.200	0.040	0.080	0.010	0.033

Hardness	C 36.1
Proof Load:	4 passed at 180,000 psi min
Plating	Geomet 321 + L - Pass

We hereby certify that to our actual knowledge the information contained herein is correct. We also certify that all parts substantially conform to SAE, ASTM, or customer specifications as agreed upon. The product has been manufactured and tested in accordance with our Quality Assurance manual. The above data accurately represents values provided by our suppliers or values generated in the EFG-BEREA laboratory. Statistical process control data is on file. All manufacturing processes for these parts occurred in the United States of America.
* Processed Mercury Free using material that is Free of Welds.

This document may only be reproduced without alteration and only for the purpose of certifying the quantity of the product specified here.

Joe Kilpatrick

Joe Kilpatrick
Quality Technician

Figure H-6. $^{5}/_{16}$-in. Heavy Hex Nut, Test No. UCSS-8

HANGZHOU SPRING WASHER CO.,LTD

QUALITY TEST CERTIFICATE OF SPRING LOCK WASHER

Standard: ASME B 18.21.1-2009 Contract No.: 18HZW07392

Order No.: PO 210166226 Invoice No.: 18SHD395

Chemical Composition (%)	C	Si	Mn	P	S	Cr	Ni	Cu
	0.64	0.21	0.55	0.01	0.012	0.07	0.04	0.08
Heat No.	F890005507							

Specification	3/8" MECH	
Quantity	72 M	
Lot No.	1808061	
Part No.	133622	

Testing Item	Ac/n	Norm	Result	Reject	Norm	Result	Reject
Inside Diameter	2/100	9.58-9.78	9.62-9.78	0			
Outside Diameter	1/32	Max17.27	Max17.26	0			
Width	1/32	Min3.58	Min3.63	0			
Thickness	1/32	2.39-2.64	2.47-2.58	0			
Height							
Section							
Surface Defects	2/100	None	None	0			
Hardness	0/8	HRC38-46	HRC38-38.7	0			
Springing							
Toughness	0/8	Qualified	Qualified	0			

General:

The spring lock washers are conformed with the standard of ASME B 18.21.1-2009. QUALIFI

杭州弹簧垫圈有限公司 质检专用章

Inspector: Shiweiqing Quality Inspection Chief: Date: 2020.10.23

Figure H-7. ⅜-in. Dia. Lock Washer, Test No. UCSS-8

FNL Part#0159678

Prestige Stamping, LLC

23513 Groesbeck Highway
Warren, Michigan 48089
(586)773-2700 * Fax (586)773-2298
www.PrestigeStamping.com

PRODUCT CERTIFICATION

CERTIFICATION NUMBER

218380

THIS IS TO CERTIFY THE PRODUCT STATED BELOW WAS FABRICATED AND PROCESSED TO THE ORDER AS INDICATED AND CONFORMS TO THE APPLICABLE SPECIFICATIONS AND STANDARDS.

Customer: FASTENAL/EDWARDSVILLE
9911 WOODEND ROAD
EDWARDSVILLE, KS 66111
USA

Customer Part: 5/16"USS ZINC
Prestige Part: P0889MP00
Part Name: 5/16"USS ZINC RoHS COMPLIANT
Purchase Order: 210228752
Shipment BOL: B228034
Shipment ID: A0248877
Quantity: 12000
Manufacturers Marking: "P"

Steel Supplier: KENWAL STEEL CORP.
Grade: CSECONDARY STEEL
Lot: D9842
Heat: 252887
Carbon: .05
Manganese: .87
Phosphorous: .012
Sulfur: .002
Silicon: .02

SPECIFICATIONS	TEST RESULTS
PLATING: TEST METHOD: ASTM B499 0.00015" Min. ELELCTRO ZINC & TRIVALENT CLEAR-PER ASTM B633 TYPE III,SC1,HEX FREE	PLATING: 0.00020" - 0.00030"

USS/SAE LC Washers are manufactured to the requirements of ASTM F844 specifications
Chemistry is as reported from raw material certification and does not fall under Prestige Stamping's accreditation.
This product was produced under an IATF 16949 Quality Assurance System.
IATF 16949 Certification No: 800334.
Material was melted and manufactured in the U.S.A.
This product was manufactured in Warren, Michigan U.S.A.
This product conforms to all requirements for washers as produced according to ANSI/ASMI B18.22.1.
Mechanical properties and test methods for hardness conform to ASTM F436
Sampling Plan per P.S.I W.I. # 5.4.18.015.
The test results only apply to the items tested.
This test report must not be reproduced except in full without prior written approval.
Materials used to manufacture these products are mercury, asbestos and radio activity free.
Product is RoHS compliant.
No weld repairs made to material.
All certified product is AIS compliant.

FRANK SCHUBERT
Quality Assurance Manager

Econ Information System 09/17/20 09:58 RFOR PAGE 1 of 1

Figure H-8. $^{5}/_{16}$-in. Dia. Plain Round Washer, Test No. UCSS-8

120 Park Street
Troy, MI 48083
Phone: 248-588-3000 Fax: 248-588-2526
Website: www.stainlessandaluminum.com

Certificate of Analysis and Testing

Customer: Rush Machine Inc.
256 Minnesota
Troy, MI 48083

PO Number: 15284
Order Number: 16362

Weight	Description		Heat Number
2,013.00	3/4" ROUND 12L14 X 12 FT	12L14	192232
TAGS:	87749 87750		

Analysis

B	C	N	Mg	Al	Si	P	S	Ca	Ti	V	Cr
0.0000	0.0700	0.0000	0.0000	0.0000	0.0400	0.0520	0.2950	0.0000	0.0000	0.0000	0.1000

Mn	Fe	Co	Ni	Cu	Zn	Nb/Cb	Mo	Cd	Sn	W	Pb
1.1500	0.0000	0.0000	0.0900	0.1900	0.0000	0.0000	0.0200	0.0000	0.0000	0.0000	0.2300

Mechanical Properties

Tensile PSI	Yield PSI	Elongation % 2 Inches	Reduction of Area %	Rockwell B Scale	Grain Size	Charpy F
0.00	0.00	0.00000	0.00000	0.00000	0.00000	0.00000

FREE OF MERCURY, NO WELD REPAIR. DFARS

Testing Procedures

ASTM A108-13, ASTM, A29/A29M-16

We hereby certify that the forgoing data is a true copy of the data furnished to us by our supplier or resulting from tests performed in a recognized laboratory.

Figure H-9. ¾-in. x ½-in. Post Spacer, Test No. UCSS-8

Appendix I. Test No. UCSS-9 Material Specifications

Table I-1. Bill of Materials, Test No. UCSS-9

Item No.	Description	Material Specification	Reference
a1	1.12 lb/ft U-Channel Sign Post, 78" Long	ASTM A499 Gr. 60	PO#1543 COC only
b1	3"x6"x0.08" Reflective Delineator	Aluminum Alloy 5052 or Similar	RTS-215749 COC
c1	$^{5}/_{16}$"-18 UNC, 1" long machine screw	Stainless Steel	H#4C781 H#4C488 P#71914 PO#120193636
c2	$^{5}/_{16}$" Dia. Plain Round Washer	Low Carbon Steel	H#252887 PO#210228752
c3	$^{5}/_{16}$"-18 UNC, Lock Nut	Stainless Steel	H#5Z745 P#70797 O#120360176

Franklin Industries

CERTIFICATE OF COMPLIANCE

July 12, 2018

Sanbar Construction
9101 Broadway SE
Albuquerque, NM 87105

RE: Customer Purchase Order No: 1543
Franklin Industries' Folio No: H5018
Franklin Industries' Product: 7', 1.12lb. per ft. 10', 11', 3'6, 3lb. per ft. green u channel post.

We hereby certify that all posts manufactured by Franklin Industries Co are hot rolled and fabricated in Franklin, Pennsylvania and have been produced from recycled Standard T rails weighing 91 lbs. / yard or heavier, complying with ASTM specification A499-89, Grade 60. Standard T rails used for products subject to "Buy America" requirements were produced according to ASTM A1 from rails melted and rolled in the United States of America.

Yours truly,

Darlene Suttle
Customer Service/Sales

PO Box 671 Franklin, PA 16323
Sales Office 814.437.3726
Fax 814.432.7556

Figure I-1. 1.12 lb/ft U-Channel Sign Post, 78-in. Long, Test No. UCSS-9

SmartSign

300 Cadman Plaza West, ste 1303
Brooklyn NY 11201
Phone: 1-800-952-1457

10/27/2020

CERTIFICATE OF COMPLIANCE

Smartsign hereby certifies that all materials supplied against purchase order PO UCSS-9 / RTS-215749 shipped on 10/26/2020 conforms to the material and/ or manufacturing specifications as called on this said purchase order without expectations.

Item # X-OM-3R

Description: **Type 3 Object Marker** [Engineer Grade Reflective Aluminum Sign, 80 mil]

Shelf life 10 year after Manufacture date 10/26/2020

Sincerely,

Tahyna Colon
Call Center Manager
tahyna@smartsign.com
800-952-1457 x 7140

Figure I-2. 3-in. x 6-in. x 0.08-in. Reflective Delineator, Test No. UCSS-9

MIN HWEI ENTERPRISE CO., LTD.
NO. 18 YONG HSIANG ROAD, FONG-LIAO, PING-NAN INDUSTRIAL DISTRICT
PINGTUNG, TAIWAN, R.O.C. TEL: 886-8-8669611 FAX: 886-8-8669901
E-mail:export@minhwei.com.tw

CERTIFICATE OF INSPECTION

MANUFACTURING DATE : 03/21/2014 CERT NO.: MHB4070035 -090
PURCHASER : FASTENAL COMPANY PURCHASING-IMPORT TRAFFIC
PO NO. : 120193636 LOT NO.: O0327144
INVOICE NO.: MHB4070035 TP. 282 HEAT NO.: 4C781
COMMODITY : TRUSS HEAD;SLOTTED; PART NO.: 71914
SIZE : 5/16"-18 X 1"; MATERIAL TYPE: 304
LOT QTY : 5,600 PCS SAMPLE SIZE : 5 PCS
CARTONS : 4 SAMPLE PLAN SPEC.: MIL-STD-105E

DIMENSIONAL INSPECTIONS SPECIFICATION:
(MEASUREMENT BY INCHES)

CHARACTERISTICS	SPECIFICATION	ACTUAL RESULT	PASSED	REJ.
Head Diameter	0.666 - 0.698	0.672 - 0.695	5	0
Head Thickness	0.162 - 0.183	0.178 - 0.179	5	0
Slotted Depth	0.085 - 0.106	0.086 - 0.094	5	0
Ring Gauge Go		PASSED	5	0
Ring Gauge No Go		PASSED	5	0
Major Diameter	0.303 - 0.311	0.307 - 0.308	5	0
Length	0.970 - 1.000	0.971 - 0.979	5	0
Visual Appearance	ASTM F788/F788M-2007	PASSED		

Cleaned in accordance with ASTM A380

CHEMICAL ANALYSIS %

HEAT NUMBER	C X100	Si X100	Mn X100	P X1000	S X1000	Ni X100	Cr X100	Mo X100	Cu X100	N XPPM
4C781	2.4	32.0	177.0	29.0	2.1	801.0	1827.0	11.0	63.0	

REMARK:

Hsing-Liang Chou Jul 29, 2014 1 OF 1
DATE PAGE

THIS REPORT MUST NOT BE REPRODUCED EXCEPT IN FULL AND TO THE ITEM(S) TESTED ONLY.

Figure I-3. $^{5}/_{16}$-in., 1-in. Long Machine Screw, Test No. UCSS-9

MIN HWEI ENTERPRISE CO., LTD.
NO. 18 YONG HSIANG ROAD, FONG-LIAO, PING-NAN INDUSTRIAL DISTRICT
PINGTUNG, TAIWAN, R.O.C. TEL: 886-8-8669611 FAX: 886-8-8669901
E-mail:export@minhwei.com.tw

CERTIFICATE OF INSPECTION

MANUFACTURING DATE : 03/21/2014 CERT NO.: MHB4070035 -089
PURCHASER : FASTENAL COMPANY PURCHASING-IMPORT TRAFFIC
PO NO. : 120193636 LOT NO.: O0321111
INVOICE NO.: MHB4070035 TP. 282 HEAT NO.: 4C488
COMMODITY : TRUSS HEAD;SLOTTED; PART NO.: 71914
SIZE : 5/16"-18 X 1"; MATERIAL TYPE: 304
LOT QTY : 2,800 PCS SAMPLE SIZE : 5 PCS
CARTONS : 2 SAMPLE PLAN SPEC.: MIL-STD-105E

DIMENSIONAL INSPECTIONS SPECIFICATION:
(MEASUREMENT BY INCHES)

CHARACTERISTICS	SPECIFICATION	ACTUAL RESULT	PASSED	REJ.
Head Diameter	0.666 - 0.698	0.681 - 0.684	5	0
Head Thickness	0.162 - 0.183	0.177 - 0.179	5	0
Slotted Depth	0.085 - 0.106	0.086 - 0.097	5	0
Ring Gauge Go		PASSED	5	0
Ring Gauge No Go		PASSED	5	0
Major Diameter	0.303 - 0.311	0.308 - 0.309	5	0
Length	0.970 - 1.000	0.978 - 0.986	5	0
Visual Appearance	ASTM F788/F788M-2007	PASSED		

Cleaned in accordance with ASTM A380

CHEMICAL ANALYSIS %

HEAT NUMBER	C X100	Si X100	Mn X100	P X1000	S X1000	Ni X100	Cr X100	Mo X100	Cu X100	N XPPM
4C488	2.1	28.0	176.0	29.0	0.3	801.0	1824.0	14.0	70.0	0.0

REMARK:

Hsing-Liang Chou

Jul 29, 2014
DATE

1 OF 1
PAGE

THIS REPORT MUST NOT BE REPRODUCED EXCEPT IN FULL AND TO THE ITEM(S) TESTED ONLY.

Figure I-4. $^{5}/_{16}$-in., 1-in. Long Machine Screw, Test No. UCSS-9

FNL Part#0159678

Prestige Stamping, LLC

23513 Groesbeck Highway
Warren, Michigan 48089
(586)773-2700 * Fax (586)773-2298
www.PrestigeStamping.com

PRODUCT CERTIFICATION

CERTIFICATION NUMBER

218380

THIS IS TO CERTIFY THE PRODUCT STATED BELOW WAS FABRICATED AND PROCESSED TO THE ORDER AS INDICATED AND CONFORMS TO THE APPLICABLE SPECIFICATIONS AND STANDARDS.

Customer: FASTENAL/EDWARDSVILLE
9911 WOODEND ROAD
EDWARDSVILLE, KS 66111
USA

Customer Part: 5/16"USS ZINC
Prestige Part: P0889MP00
Part Name: 5/16"USS ZINC RoHS COMPLIANT
Purchase Order: 210228752
Shipment BOL: B228034
Shipment ID: A0248877
Quantity: 12000
Manufacturers Marking: "P"

Steel Supplier: KENWAL STEEL CORP.
Grade: CSECONDARY STEEL
Lot: D9842
Heat: 252887
Carbon: .05
Manganese: .87
Phosphorous: .012
Sulfur: .002
Silicon: .02

SPECIFICATIONS	TEST RESULTS
PLATING: TEST METHOD: ASTM B499 0.00015" Min. ELELCTRO ZINC & TRIVALENT CLEAR-PER ASTM B633 TYPE III,SC1,HEX FREE	PLATING: 0.00020" - 0.00030"

USS/SAE LC Washers are manufactured to the requirements of ASTM F844 specifications
Chemistry is as reported from raw material certification and does not fall under Prestige Stamping's accreditation.
This product was produced under an IATF 16949 Quality Assurance System.
IATF 16949 Certification No: 800334.
Material was melted and manufactured in the U.S.A.
This product was manufactured in Warren, Michigan U.S.A.
This product conforms to all requirements for washers as produced according to ANSI/ASMI B18.22.1.
Mechanical properties and test methods for hardness conform to ASTM F436
Sampling Plan per P.S.I W.I. # 5.4.18.015.
The test results only apply to the items tested.
This test report must not be reproduced except in full without prior written approval.
Materials used to manufacture these products are mercury, asbestos and radio activity free.
Product is RoHS compliant.
No weld repairs made to material.
All certified product is AIS compliant.

FRANK SCHUBERT
Quality Assurance Manager

Econ Information System 09/17/20 09:58 RFOR PAGE 1 of 1

Figure I-5. $^{5}/_{16}$-in. Dia. Plain Round Washer, Test No. UCSS-9

CLC INDUSTRIAL CO., LTD.

NO. 158, YILIN ROAD, RENDE DIST.
TAINAN CITY 717, TAIWAN
TEL: 886-6-2700392 FAX: 886-6-2701296

CERTIFICATE OF INSPECTION

CUSTOMER : FASTENAL COMPANY PURCHASING--IMPORT TRAFFIC DATE: 2019/10/29
ORDER NO. : 120360176
Part # : 70797
SAMPLING PLAN PER ASME B18.18-2011, category 2 LOT#B015319083001

DESCRIPTION & SIZE	No. of kegs	LOT SIZE
304 S.S HEX CONE NUTS, TOP LOCK, COATED, MAKER'S SIGN 5/16-18	4	16,000

DIMENSION CONTROL PER Fastenal Product Standard TPLK.SS	STANDARD		ACTUAL	
ACROSS FLATS	.489-.502	MM	.495-.496	MM
THICKNESS	.258-.336	MM	.281-.287	MM
APPEARANCE	VISUAL		OK	
GO GAUGE	OK		OK	
NO-GO GAUGE	OK		OK	

CHEMICAL ANALYSIS (AISI 304J3-S)

HEAT NO.	ELEMENTS	C	Si	Mn	P	S	Ni	Cr	Mo	Cu	N
		×100			×1000		×100				×10000
5Z745	MIN						800	1700		100	
DIA (mm)	MAX	8	100	200	45	30	1050	1900		300	
12.00	RESULTS	1.1	34	185	31	0.6	804	1721	23	280	102

INSPECTED BY

Itsuki

INSPECTOR NO. S49

Figure I-6. $^{5}/_{16}$-in. Lock Nut, Test No. UCSS-9

Appendix J. Test No. UCSS-10 Material Specifications

Table J-1. Bill of Materials, Test No. UCSS-10

Item No.	Description	Material Specification	Reference
a1	4.00 lb/ft U-Channel Sign Post, 130" Long	ASTM A499 Gr. 80	H#4400006934 and H#4400006937
b1	36"x36"x0.08" Sign with Reflective Sheeting	Aluminum Alloy 5052 or Similar	RTS-209590 COC
c1	$^{5}/_{16}$"-18 UNC, 2 3/4" Long Hex Bolt	SAE J429 Gr. 5 or 9	H#10229550
c2	$^{5}/_{16}$"-18 UNC Heavy Hex Nut	SAE J995 Gr. 5 or 9	H#10463770 P#11541092 PO#180159538
c3	⅜" Dia. Lock Washer	Low Carbon Steel	H#F890005507 P#133622 PO#210166226
c4	$^{5}/_{16}$" Dia. Plain Round Washer	Low Carbon Steel	H#252887 PO#210228752

NUCOR

Mill Certification
10/07/2020

MTR#:483577-8
Lot #:440000693465
912 Cheney Avenue
Marion, OH 43302 US
800 333-4011
Fax: 740 383-6429

Sold To: GRIMCO INC
11745 SAPPINGTON BARRACKS RD
SUNSET HILLS, MO 63127 US

Ship To: SAN BAR CONSTRUCTION CORP AND SIGN MFG
JARRETT 877-392-9809
9101 BROADWAY BLVD SE
ALBUQUERQUE, NM 87105 US

Customer PO	1640182	Sales Order #	44004972 - 3.1
Product Group	U-Channel	Product #	1060128
Grade	SP80	Lot #	440000693465
Size	4#	Heat #	4400006934
BOL #	BOL-569736	Load #	483577
Description	U-Channel Rib-Bak 4 lbs/ft SP80 10' 0" [120"] Powder Coat - Green No Taper 1" OC 3/8 FL 50 pcs	Customer Part #	
Production Date	08/27/2020	Qty Shipped LBS	8000
Product Country Of Origin	United States	Qty Shipped EA	200
Original Item Description		Original Item Number	

I hereby certify that the material described herein has been manufactured in accordance with the specifications and standards listed above and that it satisfies those requirements.

Melt Country of Origin : United States — Melting Date: 07/30/2020
Roll Country of Origin : United States — Rolling Date: 08/04/2020

C (%)	Mn (%)	P (%)	S (%)	Si (%)	Ni (%)	Cr (%)	Mo (%)	Cu (%)	Sn (%)
0.71	0.73	0.013	0.033	0.190	0.14	0.12	0.04	0.33	0.012

Other Test Results
Yield (PSI) : 88400 — Tensile (PSI) : 141800 — Elongation in 8" (%) : 6.0

Comments:

Material conforms to ASTM A1075; conforms to chemistry requirements of ASTM A1 and tensile requirements of ASTM A499.
All manufacturing processes of the steel materials in this product, including melting, have occurred within the United States.
All products produced are weld free. Mercury, in any form, has not been used in the production or testing of this material.

Ignatius Okafor, Division Metallurgist

Page 1 of 1

Figure J-1. 4.00 lb/ft U-Channel Sign Post, Test No. UCSS-10

NUCOR

Mill Certification
09/03/2020

MTR#:483578-11
Lot #:440000693769
912 Cheney Avenue
Marion, OH 43302 US
800 333-4011
Fax: 740 383-6429

Sold To: GRIMCO INC
11745 SAPPINGTON BARRACKS RD
SUNSET HILLS, MO 63127 US

Ship To: SAN BAR CONSTRUCTION CORP AND SIGN MFG
JARRETT 877-392-9809
9101 BROADWAY BLVD SE
ALBUQUERQUE, NM 87105 US

Customer PO	1640182	Sales Order #	44004972 - 11.1
Product Group	U-Channel	Product #	1060378
Grade	SP80	Lot #	440000693769
Size	4#	Heat #	4400006937
BOL #	BOL-568786	Load #	483578
Description	U-Channel Rib-Bak 4 lbs/ft SP80 3' 6" [42"] Powder Coat - Green Taper One End 1" OC 3/8 FL 50 pcs	Customer Part #	
Production Date	08/26/2020	Qty Shipped LBS	7000
Product Country Of Origin	United States	Qty Shipped EA	500
Original Item Description		Original Item Number	

I hereby certify that the material described herein has been manufactured in accordance with the specifications and standards listed above and that it satisfies those requirements.

Melt Country of Origin : United States — Melting Date: 07/30/2020
Roll Country of Origin : United States — Rolling Date: 08/04/2020

C (%)	Mn (%)	P (%)	S (%)	Si (%)	Ni (%)	Cr (%)	Mo (%)	Cu (%)	Sn (%)
0.72	0.75	0.011	0.033	0.190	0.15	0.11	0.05	0.33	0.011

Other Test Results
Yield (PSI) : 88300 — Tensile (PSI) : 147000 — Elongation in 8" (%) : 11.0

Comments:

Material conforms to ASTM A1075; conforms to chemistry requirements of ASTM A1 and tensile requirements of ASTM A499.
All manufacturing processes of the steel materials in this product, including melting, have occurred within the United States.
All products produced are weld free. Mercury, in any form, has not been used in the production or testing of this material.

Ignatius Okafor, Division Metallurgist

Page 1 of 1

Figure J-2. 4.00 lb/ft U-Channel Sign Post, Test No. UCSS-10

SmartSign

300 Cadman Plaza West, ste 1303
Brooklyn NY 11201

9/28/2020

CERTIFICATE OF COMPLIANCE

Smartsign hereby certifies that all materials supplied against purchase order PO UCSS / RTS-209590shipped on 9/2/2020 conforms to the material and/ or manufacturing specifications as called on this said purchase order without expectations.

Item #
X-R5-1

Description: Engineer Grade Reflective Aluminum Sign, 80 mil

Sincerely,

Tahyna Colon
Call Center Manager
tahyna@smartsign.com
800-952-1457 x 7140

Figure J-3. 36-in. x 36-in. x 0.08-in. Sign with Reflective Sheeting, Test No. UCSS-10

LOAD

CHARTER STEEL

A Division of
Charter Manufacturing Company, Inc.

CHARTER STEEL TEST REPORT
Reverse Has Text And Codes

1658 Cold Springs Road
Saukville, Wisconsin 53080
(262) 268-2400
1-800-437-8789
FAX (262) 268-2570

Fastenal-West Hartford
61 Barnes Industrial Park North
Wallingford,CT-06492
Kind Attn :Mark Leone

Cust P.O.	350006957
Customer Part #	0970917
Charter Sales Order	30053773
Heat #	10229550
Ship Lot #	4182846
Grade	8640 R SK FG RHQ 3/8
Process	SA+SAFS
Finish Size	0.3265

I hereby certify that the material described herein has been manufactured in accordance with the specifications and standards listed below and on the reverse side,and that it satisfies these requirements.

Test Results of Heat Lot# 10229550

Lab Code: 7388

CHEM	C	MN	P	S	SI	NI	CR	MO	CU	SN	V
%Wt	.39	.85	.010	.007	.230	.44	.43	.22	.13	.009	.003

	AL	N	B	TI	NB
	.025	.0060	.0001	.002	.002

JOMINY(HRC)	JOM01	JOM02	JOM03	JOM04	JOM05	JOM06	JOM07	JOM08	JOM09	JOM10	JOM12
	56	56	56	53	52	48	46	44	43	41	38

	JOM14	JOM16	JOM18	JOM20	JOM24	JOM28	JOM32
	36	34	33	32	30	28	27

JOMINY SAMPLE TYPE ENGLISH = C
CHEM. DEVIATION EXT.-GREEN =

Test Results of Rolling Lot# 1084924

REDUCTION RATIO = 274:1

Test Results of Processing Lot# 4182487,4182846

	# of Tests	Min Value	Max Value	Mean Value	
TENSILE	1.0	72.6	72.6	72.6	TENSILE LAB = 0358-02
REDUCTION OF AREA	1	76	76	76	RA LAB = 0358-02
ROCKWELL B	1	76	76	76	RB LAB = 0358-02

NUM DECARB = 1 FREE FERRITE DECARB = .000 FREE FERR & PARTIAL DECARB = .002

Specifications: Manufactured per Charter Steel Quality Manual Rev 9,08-01-09
Meets customer specifications with any applicable Charter Steel exceptions for the following customer documents:
Customer Document = QWI#23 - DETAIL 55 Revision = New Dated = 02-MAR-12

Additional Comments:

3-2359

Charter Steel
Saukville, WI, USA

Rem: Load1,Fax0,Mail0

ACCREDITED
Testing Laboratory

Page 1 of 1

This MTR supersedes all previously dated MTRs for this order

Janice Barnard
Manager of Quality Assurance
01/08/2013

Figure J-4. $^{5}/_{16}$-in., 2¾-in. Long Hex Bolt, Test No. UCSS-10

ELGIN FASTENER GROUP
BEREA DI ANT

MATERIAL CERTIFICATION

Customer: FASTENAL COMPANY 3833 AIRPORT RD. DENTON TX 76207		**Date:** 10/25/2018	
	Customer P.O. Number:	180159538	
	Customer Part Number:	11541092	
	Invoice Number:	84821	
	Lot Number:	0072385-129135-129136	
Description: NUT THICK HEX 5/16-18 FNL9 ORG	**Ship Quantity:** 8000	**Ship Date:**	10/25/2018
	Material: 1038	**Heat Number:**	10463770
Specification:			

C	Mn	P	S	Si	Ni	Cr	Mo	Al
0.380	0.750	0.008	0.010	0.200	0.040	0.080	0.010	0.033

Hardness	C 36.1
Proof Load:	4 passed at 180,000 psi min
Plating	Geomet 321 + L - Pass

We hereby certify that to our actual knowledge the information contained herein is correct. We also certify that all parts substantially conform to SAE, ASTM, or customer specifications as agreed upon. The product has been manufactured and tested in accordance with our Quality Assurance manual. The above data accurately represents values provided by our suppliers or values generated in the EFG-BEREA laboratory. Statistical process control data is on file. All manufacturing processes for these parts occurred in the United States of America.
* Processed Mercury Free using material that is Free of Welds.

This document may only be reproduced without alteration and only for the purpose of certifying the quantity of the product specified here.

Joe Kilpatrick

Joe Kilpatrick
Quality Technician

Figure J-5. $^{5}/_{16}$-in. Heavy Hex Nut, Test No. UCSS-10

HANGZHOU SPRING WASHER CO.,LTD

QUALITY TEST CERTIFICATE OF SPRING LOCK WASHER

Standard: ASME B 18.21.1-2009 Contract No.: 18HZW07392

Order No.: PO 210166226 Invoice No.: 18SHD395

Chemical Composition (%)	C	Si	Mn	P	S	Cr	Ni	Cu
	0.64	0.21	0.55	0.01	0.012	0.07	0.04	0.08
Heat No.	F890005507							

Specification	3/8" MECH	
Quantity	72 M	
Lot No.	1808061	
Part No.	133622	

Testing Item	Ac/n	Norm	Result	Reject	Norm	Result	Reject
Inside Diameter	2/100	9.58-9.78	9.62-9.78	0			
Outside Diameter	1/32	Max17.27	Max17.26	0			
Width	1/32	Min3.58	Min3.63	0			
Thickness	1/32	2.39-2.64	2.47-2.58	0			
Height							
Section							
Surface Defects	2/100	None	None	0			
Hardness	0/8	HRC38-46	HRC38-38.7	0			
Springing							
Toughness	0/8	Qualified	Qualified	0			

General:

The spring lock washers are conformed with the standard of ASME B 18.21.1-2009. QUALIFI

杭州弹簧垫圈有限公司 质检专用章

Inspector: Shiweiqing Quality Inspection Chief: Date: 2020.10.23

Figure J-6. ⅜-in. Dia. Lock Washer, Test No. UCSS-10

FNL Part#0159678

Prestige Stamping, LLC

23513 Groesbeck Highway
Warren, Michigan 48089
(586)773-2700 * Fax (586)773-2298
www.PrestigeStamping.com

PRODUCT CERTIFICATION

CERTIFICATION NUMBER

218380

THIS IS TO CERTIFY THE PRODUCT STATED BELOW WAS FABRICATED AND PROCESSED TO THE ORDER AS INDICATED AND CONFORMS TO THE APPLICABLE SPECIFICATIONS AND STANDARDS.

Customer: FASTENAL/EDWARDSVILLE
9911 WOODEND ROAD
EDWARDSVILLE, KS 66111
USA

Customer Part: 5/16"USS ZINC
Prestige Part: P0889MP00
Part Name: 5/16"USS ZINC RoHS COMPLIANT
Purchase Order: 210228752
Shipment BOL: B228034
Shipment ID: A0248877
Quantity: 12000
Manufacturers Marking: "P"

Steel Supplier: KENWAL STEEL CORP.
Grade: CSECONDARY STEEL
Lot: D9842
Heat: 252887
Carbon: .05
Manganese: .87
Phosphorous: .012
Sulfur: .002
Silicon: .02

SPECIFICATIONS	TEST RESULTS
PLATING: TEST METHOD: ASTM B499 0.00015" Min. ELELCTRO ZINC & TRIVALENT CLEAR-PER ASTM B633 TYPE III,SC1,HEX FREE	PLATING: 0.00020" - 0.00030"

USS/SAE LC Washers are manufactured to the requirements of ASTM F844 specifications
Chemistry is as reported from raw material certification and does not fall under Prestige Stamping's accreditation.
This product was produced under an IATF 16949 Quality Assurance System.
IATF 16949 Certification No: 800334.
Material was melted and manufactured in the U.S.A.
This product was manufactured in Warren, Michigan U.S.A.
This product conforms to all requirements for washers as produced according to ANSI/ASMI B18.22.1.
Mechanical properties and test methods for hardness conform to ASTM F436
Sampling Plan per P.S.I W.I. # 5.4.18.015.
The test results only apply to the items tested.
This test report must not be reproduced except in full without prior written approval.
Materials used to manufacture these products are mercury, asbestos and radio activity free.
Product is RoHS compliant.
No weld repairs made to material.
All certified product is AIS compliant.

FRANK SCHUBERT
Quality Assurance Manager

Econ Information System 09/17/20 09:58 RFOR PAGE 1 of 1

Figure J-7. $^{5}/_{16}$-in. Dia. Plain Round Washer, Test No. UCSS-10

Appendix K. Test No. UCSS-11 Material Specifications

Table K-1. Bill of Materials, Test No. UCSS-11

Item No.	Description	Material Specification	Reference
a1	4.00 lb/ft U-Channel Sign Post, 120" Long	ASTM A499 Gr. 80	H#4400006934 and H#4400006937
a2	4.00 lb/ft U-Channel Sign Post, 42" Long	ASTM A499 Gr. 80	H#4400006934 and H#4400006937
b1	36"x36"x0.08" Sign with Reflective Sheeting	Aluminum Alloy 5052 or Similar	RTS-209590 COC
c1	$^{5}/_{16}$"-18 UNC, 2¾" Long Hex Bolt	SAE J429 Gr. 5 or 9	H#10229550
c2	$^{5}/_{16}$"-18 UNC, 2¼" Long Hex Bolt	SAE J429 Gr. 9	H#10242060
c3	$^{5}/_{16}$"-18 UNC Heavy Hex Nut	SAE J995 Gr. 5 or 9	H#10463770 P#11541092 PO#180159538
c4	⅜" Dia. Lock Washer	Low Carbon Steel	H#F890005507 P#133622 PO#210166226
c5	$^{5}/_{16}$" Dia. Plain Round Washer	Low Carbon Steel	H#252887 PO#210228752
c6	¾"x½" Post Spacer	As Supplied	H#192232

NUCOR

Mill Certification
10/07/2020

MTR#:483577-8
Lot #:440000693465
912 Cheney Avenue
Marion, OH 43302 US
800 333-4011
Fax: 740 383-6429

Sold To: GRIMCO INC
11745 SAPPINGTON BARRACKS RD
SUNSET HILLS, MO 63127 US

Ship To: SAN BAR CONSTRUCTION CORP AND SIGN MFG
JARRETT 877-392-9809
9101 BROADWAY BLVD SE
ALBUQUERQUE, NM 87105 US

Customer PO	1640182	Sales Order #	44004972 - 3.1
Product Group	U-Channel	Product #	1060128
Grade	SP80	Lot #	440000693465
Size	4#	Heat #	4400006934
BOL #	BOL-569736	Load #	483577
Description	U-Channel Rib-Bak 4 lbs/ft SP80 10' 0" [120"] Powder Coat - Green No Taper 1" OC 3/8 FL 50 pcs	Customer Part #	
Production Date	08/27/2020	Qty Shipped LBS	8000
Product Country Of Origin	United States	Qty Shipped EA	200
Original Item Description		Original Item Number	

I hereby certify that the material described herein has been manufactured in accordance with the specifications and standards listed above and that it satisfies those requirements.

Melt Country of Origin : United States — Melting Date: 07/30/2020
Roll Country of Origin : United States — Rolling Date: 08/04/2020

C (%)	Mn (%)	P (%)	S (%)	Si (%)	Ni (%)	Cr (%)	Mo (%)	Cu (%)	Sn (%)
0.71	0.73	0.013	0.033	0.190	0.14	0.12	0.04	0.33	0.012

Other Test Results
Yield (PSI) : 88400 Tensile (PSI) : 141800 Elongation in 8" (%) : 6.0

Comments:

Material conforms to ASTM A1075; conforms to chemistry requirements of ASTM A1 and tensile requirements of ASTM A499.
All manufacturing processes of the steel materials in this product, including melting, have occurred within the United States.
All products produced are weld free. Mercury, in any form, has not been used in the production or testing of this material.

Ignatius Okafor, Division Metallurgist

Page 1 of 1

Figure K-1. 4.00 lb/ft U-Channel Sign Post, Test No. UCSS-11

NUCOR

Mill Certification
09/03/2020

MTR#:483578-11
Lot #:440000693769
912 Cheney Avenue
Marion, OH 43302 US
800 333-4011
Fax: 740 383-6429

Sold To: GRIMCO INC
11745 SAPPINGTON BARRACKS RD
SUNSET HILLS, MO 63127 US

Ship To: SAN BAR CONSTRUCTION CORP AND SIGN MFG
JARRETT 877-392-9809
9101 BROADWAY BLVD SE
ALBUQUERQUE, NM 87105 US

Customer PO	1640182	Sales Order #	44004972 - 11.1
Product Group	U-Channel	Product #	1060378
Grade	SP80	Lot #	440000693769
Size	4#	Heat #	4400006937
BOL #	BOL-568786	Load #	483578
Description	U-Channel Rib-Bak 4 lbs/ft SP80 3' 6" [42"] Powder Coat - Green Taper One End 1" OC 3/8 FL 50 pcs	Customer Part #	
Production Date	08/26/2020	Qty Shipped LBS	7000
Product Country Of Origin	United States	Qty Shipped EA	500
Original Item Description		Original Item Number	

I hereby certify that the material described herein has been manufactured in accordance with the specifications and standards listed above and that it satisfies those requirements.

Melt Country of Origin : United States — Melting Date: 07/30/2020
Roll Country of Origin : United States — Rolling Date: 08/04/2020

C (%)	Mn (%)	P (%)	S (%)	Si (%)	Ni (%)	Cr (%)	Mo (%)	Cu (%)	Sn (%)
0.72	0.75	0.011	0.033	0.190	0.15	0.11	0.05	0.33	0.011

Other Test Results
Yield (PSI) : 88300 — Tensile (PSI) : 147000 — Elongation in 8" (%) : 11.0

Comments:

Material conforms to ASTM A1075; conforms to chemistry requirements of ASTM A1 and tensile requirements of ASTM A499.
All manufacturing processes of the steel materials in this product, including melting, have occurred within the United States.
All products produced are weld free. Mercury, in any form, has not been used in the production or testing of this material.

Ignatius Okafor, Division Metallurgist

Page 1 of 1

Figure K-2. 4.00 lb/ft U-Channel Sign Post, Test No. UCSS-11

SmartSign

300 Cadman Plaza West, ste 1303
Brooklyn NY 11201

9/28/2020

CERTIFICATE OF COMPLIANCE

Smartsign hereby certifies that all materials supplied against purchase order PO UCSS / RTS-209590shipped on 9/2/2020 conforms to the material and/ or manufacturing specifications as called on this said purchase order without expectations.

Item #
X-R5-1

Description: Engineer Grade Reflective Aluminum Sign, 80 mil

Sincerely,

Tahyna Colon
Call Center Manager
tahyna@smartsign.com
800-952-1457 x 7140

Figure K-3. 36-in. x 36-in. x 0.08-in. Sign with Reflective Sheeting, Test No. UCSS-11

LOAD

CHARTER STEEL

A Division of
Charter Manufacturing Company, Inc.

CHARTER STEEL TEST REPORT
Reverse Has Text And Codes

1658 Cold Springs Road
Saukville, Wisconsin 53080
(262) 268-2400
1-800-437-8789
FAX (262) 268-2570

Fastenal-West Hartford
61 Barnes Industrial Park North
Wallingford,CT-06492
Kind Attn :Mark Leone

Cust P.O.	350006957
Customer Part #	0970917
Charter Sales Order	30053773
Heat #	10229550
Ship Lot #	4182846
Grade	8640 R SK FG RHQ 3/8
Process	SA+SAFS
Finish Size	0.3265

I hereby certify that the material described herein has been manufactured in accordance with the specifications and standards listed below and on the reverse side,and that it satisfies these requirements.

Test Results of Heat Lot# 10229550

Lab Code: 7388

CHEM	C	MN	P	S	SI	NI	CR	MO	CU	SN	V
%Wt	.39	.85	.010	.007	.230	.44	.43	.22	.13	.009	.003

	AL	N	B	TI	NB
	.025	.0060	.0001	.002	.002

JOMINY(HRC)	JOM01	JOM02	JOM03	JOM04	JOM05	JOM06	JOM07	JOM08	JOM09	JOM10	JOM12
	56	56	56	53	52	48	46	44	43	41	38

	JOM14	JOM16	JOM18	JOM20	JOM24	JOM28	JOM32
	36	34	33	32	30	28	27

JOMINY SAMPLE TYPE ENGLISH = C
CHEM. DEVIATION EXT.-GREEN =

Test Results of Rolling Lot# 1084924

REDUCTION RATIO = 274:1

Test Results of Processing Lot# 4182487,4182846

	# of Tests	Min Value	Max Value	Mean Value	
TENSILE	1.0	72.6	72.6	72.6	TENSILE LAB = 0358-02
REDUCTION OF AREA	1	76	76	76	RA LAB = 0358-02
ROCKWELL B	1	76	76	76	RB LAB = 0358-02

NUM DECARB = 1 FREE FERRITE DECARB = .000 FREE FERR & PARTIAL DECARB = .002

Specifications: Manufactured per Charter Steel Quality Manual Rev 9,08-01-09
Meets customer specifications with any applicable Charter Steel exceptions for the following customer documents:
Customer Document = QWI#23 - DETAIL 55 Revision = New Dated = 02-MAR-12

Additional Comments:

3-2359

Charter Steel
Saukville, WI, USA

Rem: Load1,Fax0,Mail0

ACCREDITED Testing Laboratory

Page 1 of 1

This MTR supersedes all previously dated MTRs for this order

Janice Barnard
Manager of Quality Assurance
01/08/2013

Figure K-4. $^{5}/_{16}$-in., 2¾-in. Long Hex Bolt, Test No. UCSS-11

LOAD

CHARTER STEEL

A Division of
Charter Manufacturing Company, Inc.

CHARTER STEEL TEST REPORT
Reverse Has Text And Codes

1658 Cold Springs Road
Saukville, Wisconsin 53080
(262) 268-2400
1-800-437-8789
FAX (262) 268-2570

Fastenal-West Hartford
61 Barnes Industrial Park North
Wallingford,CT-06492
Kind Attn :Mark Leone

Cust P.O.	350007110
Customer Part #	0970917
Charter Sales Order	30054252
Heat #	10242060
Ship Lot #	4199470
Grade	8640 R SK FG RHQ 3/8
Process	SA+SAFS
Finish Size	0.3265

I hereby certify that the material described herein has been manufactured in accordance with the specifications and standards listed below and on the reverse side,and that it satisfies these requirements.

Test Results of Heat Lot# 10242060

Lab Code: 7388

CHEM	C	MN	P	S	SI	NI	CR	MO	CU	SN	V
%Wt	.38	.86	.010	.007	.220	.46	.42	.21	.17	.009	.003

	AL	N	B	TI	NB
	.026	.0070	.0001	.001	.002

JOMINY(HRC)	JOM01	JOM02	JOM03	JOM04	JOM05	JOM06	JOM07	JOM08	JOM09	JOM10	JOM12
	55	55	55	53	50	47	45	43	41	40	37

	JOM14	JOM16	JOM18	JOM20	JOM24	JOM28	JOM32
	35	33	32	30	28	27	26

JOMINY SAMPLE TYPE ENGLISH = C
CHEM. DEVIATION EXT.-GREEN =

3.2366

Test Results of Rolling Lot# 1090751

REDUCTION RATIO = 274:1

Test Results of Processing Lot# 4195387,4199470

	# of Tests	Min Value	Max Value	Mean Value	
TENSILE	1.0	72.2	72.2	72.2	TENSILE LAB = 0358-02
REDUCTION OF AREA	1	78	78	78	RA LAB = 0358-02
ROCKWELL B	1	77	77	77	RB LAB = 0358-02

NUM DECARB = 1 FREE FERRITE DECARB = .000 FREE FERR & PARTIAL DECARB = .002

Specifications: Manufactured per Charter Steel Quality Manual Rev 9,08-01-09
Meets customer specifications with any applicable Charter Steel exceptions for the following customer documents:
Customer Document = QWI#23 - DETAIL 55 Revision = New Dated = 02-MAR-12

Additional Comments:

Charter Steel
Saukville, WI, USA

Rem: Load1,Fax0,Mail0

ACCREDITED Page 1 of 1
Testing Laboratory

This MTR supersedes all previously dated MTRs for this order

Janice Barnard
Manager of Quality Assurance
04/02/2013

Figure K-5. $^{5}/_{16}$-in., 2¼-in. Long Hex Bolt, Test No. UCSS-11

ELGIN FASTENER GROUP
BEREA DI ANT

MATERIAL CERTIFICATION

Customer: FASTENAL COMPANY 3833 AIRPORT RD. DENTON TX 76207		**Date:** 10/25/2018	
	Customer P.O. Number:	180159538	
	Customer Part Number:	11541092	
	Invoice Number:	84821	
	Lot Number:	0072385-129135-129136	
Description: NUT THICK HEX 5/16-18 FNL9 ORG	**Ship Quantity:** 8000	**Ship Date:**	10/25/2018
	Material: 1038	**Heat Number:**	10463770
Specification:			

C	Mn	P	S	Si	Ni	Cr	Mo	Al
0.380	0.750	0.008	0.010	0.200	0.040	0.080	0.010	0.033

Hardness	C 36.1
Proof Load:	4 passed at 180,000 psi min
Plating	Geomet 321 + L - Pass

We hereby certify that to our actual knowledge the information contained herein is correct. We also certify that all parts substantially conform to SAE, ASTM, or customer specifications as agreed upon. The product has been manufactured and tested in accordance with our Quality Assurance manual. The above data accurately represents values provided by our suppliers or values generated in the EFG-BEREA laboratory. Statistical process control data is on file. All manufacturing processes for these parts occurred in the United States of America.
* Processed Mercury Free using material that is Free of Welds.

This document may only be reproduced without alteration and only for the purpose of certifying the quantity of the product specified here.

Joe Kilpatrick

Joe Kilpatrick
Quality Technician

Figure K-6. $^{5}/_{16}$-in. Heavy Hex Nut, Test No. UCSS-11

HANGZHOU SPRING WASHER CO.,LTD

QUALITY TEST CERTIFICATE OF SPRING LOCK WASHER

Standard: ASME B 18.21.1-2009 Contract No.: 18HZW07392

Order No.: PO 210166226 Invoice No.: 18SHD395

Chemical Composition (%)	C	Si	Mn	P	S	Cr	Ni	Cu
	0.64	0.21	0.55	0.01	0.012	0.07	0.04	0.08
Heat No.	F890005507							
Specification	3/8" MECH							
Quantity	72 M							
Lot No.	1808061							
Part No.	133622							

Testing Item	Ac/n	Norm	Result	Reject	Norm	Result	Reject
Inside Diameter	2/100	9.58-9.78	9.62-9.78	0			
Outside Diameter	1/32	Max17.27	Max17.26	0			
Width	1/32	Min3.58	Min3.63	0			
Thickness	1/32	2.39-2.64	2.47-2.58	0			
Height							
Section							
Surface Defects	2/100	None	None	0			
Hardness	0/8	HRC38 46	HRC38 38.7	0			
Springing							
Toughness	0/8	Qualified	Qualified	0			

General:

The spring lock washers are conformed with the standard of ASME B 18.21.1-2009. QUALIFI

Inspector: Shiweiqing

Quality Inspection Chief:

Date 2020.10.23

Figure K-7. ⅜-in. Dia. Lock Washer, Test No. UCSS-11

FNL Part#0159678

Prestige Stamping, LLC

23513 Groesbeck Highway
Warren, Michigan 48089
(586)773-2700 * Fax (586)773-2298
www.PrestigeStamping.com

PRODUCT CERTIFICATION

CERTIFICATION NUMBER

218380

THIS IS TO CERTIFY THE PRODUCT STATED BELOW WAS FABRICATED AND PROCESSED TO THE ORDER AS INDICATED AND CONFORMS TO THE APPLICABLE SPECIFICATIONS AND STANDARDS.

Customer: FASTENAL/EDWARDSVILLE
9911 WOODEND ROAD
EDWARDSVILLE, KS 66111
USA

Customer Part: 5/16"USS ZINC
Prestige Part: P0889MP00
Part Name: 5/16"USS ZINC RoHS COMPLIANT
Purchase Order: 210228752
Shipment BOL: B228034
Shipment ID: A0248877
Quantity: 12000
Manufacturers Marking: "P"

Steel Supplier: KENWAL STEEL CORP.
Grade: CSECONDARY STEEL
Lot: D9842
Heat: 252887
Carbon: .05
Manganese: .87
Phosphorous: .012
Sulfur: .002
Silicon: .02

SPECIFICATIONS	TEST RESULTS
PLATING: TEST METHOD: ASTM B499 0.00015" Min. ELELCTRO ZINC & TRIVALENT CLEAR-PER ASTM B633 TYPE III,SC1,HEX FREE	PLATING: 0.00020" - 0.00030"

USS/SAE LC Washers are manufactured to the requirements of ASTM F844 specifications
Chemistry is as reported from raw material certification and does not fall under Prestige Stamping's accreditation.
This product was produced under an IATF 16949 Quality Assurance System.
IATF 16949 Certification No: 800334.
Material was melted and manufactured in the U.S.A.
This product was manufactured in Warren, Michigan U.S.A.
This product conforms to all requirements for washers as produced according to ANSI/ASMI B18.22.1.
Mechanical properties and test methods for hardness conform to ASTM F436
Sampling Plan per P.S.I W.I. # 5.4.18.015.
The test results only apply to the items tested.
This test report must not be reproduced except in full without prior written approval.
Materials used to manufacture these products are mercury, asbestos and radio activity free.
Product is RoHS compliant.
No weld repairs made to material.
All certified product is AIS compliant.

FRANK SCHUBERT
Quality Assurance Manager

Econ Information System 09/17/20 09:58 RFOR PAGE 1 of 1

Figure K-8. $^{5}/_{16}$-in. Dia. Plain Round Washer, Test No. UCSS-11

120 Park Street
Troy, MI 48083
Phone: 248-588-3000 Fax: 248-588-2526
Website: www.stainlessandaluminum.com

Certificate of Analysis and Testing

Customer: Rush Machine Inc.
256 Minnesota
Troy, MI 48083

PO Number: 15284
Order Number: 16362

Weight	Description		Heat Number
2,013.00	3/4" ROUND 12L14 X 12 FT	12L14	192232
TAGS:	87749 87750		

Analysis

B	C	N	Mg	Al	Si	P	S	Ca	Ti	V	Cr
0.0000	0.0700	0.0000	0.0000	0.0000	0.0400	0.0520	0.2950	0.0000	0.0000	0.0000	0.1000

Mn	Fe	Co	Ni	Cu	Zn	Nb/Cb	Mo	Cd	Sn	W	Pb
1.1500	0.0000	0.0000	0.0900	0.1900	0.0000	0.0000	0.0200	0.0000	0.0000	0.0000	0.2300

Mechanical Properties

Tensile PSI	Yield PSI	Elongation % 2 Inches	Reduction of Area %	Rockwell B Scale	Grain Size	Charpy F
0.00	0.00	0.00000	0.00000	0.00000	0.00000	0.00000

FREE OF MERCURY, NO WELD REPAIR. DFARS

Testing Procedures

ASTM A108-13, ASTM, A29/A29M-16

We hereby certify that the forgoing data is a true copy of the data furnished to us by our supplier or resulting from tests performed in a recognized laboratory.

Figure K-9. ¾-in. x ½-in. Post Spacer, Test No. UCSS-11

Appendix L. Surrogate, Reusable, 1100C Test Vehicle Test Summaries

MIDWEST ROADSIDE SAFETY FACILITY

Bogie Test Summary

Test Information

Test Description:	Single U-Channel Sign Supports
Test Number:	UCSS-2
Test Date:	8/4/2020
Failure Type:	Steel Shear

Post Properties

Post Type:	NA
Post Size:	NA
Post Length:	NA
Embedment Depth:	NA
Orientation:	Longitudinal Axis - 0 Degrees

Soil Properties

Gradation:	102019
Moisture Content:	NA
Compaction Method:	NA

Bogie Properties

Impact Velocity:	63.63 mph	(93.32 ft/s)
Impact Height:	23 3/4	
Bogie Mass:	2432 lb	

Data Acquired

Accelerometer:	SLICE-1
Camera Data:	AOS-5

Test Results Summary

Event Duration:	0.1920	sec
Max. Deflection:	211.5	in.
Peak Force:	10.3	k
Initial Linear Stiffness:	0.4	k/in.
Total Energy:	187.3	k-in.

	@ 5"	@ 10"	@ 15"	@20"
Average Force (k)	2.31	3.88	2.89	2.72
Energy (k-in.)	11.6	38.8	43.3	54.3

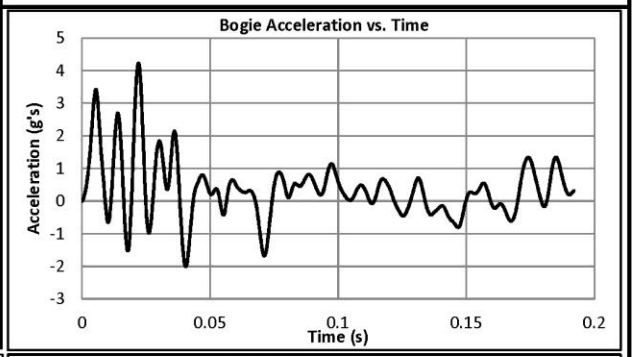

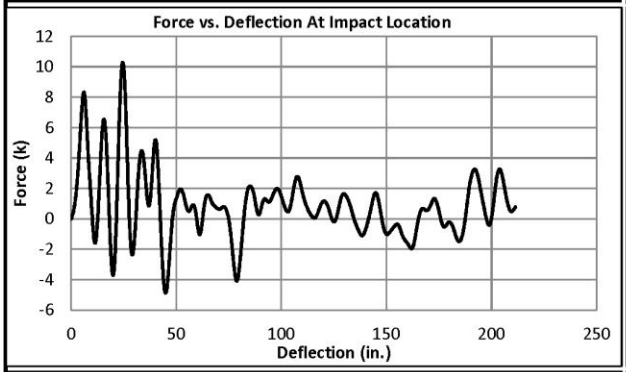

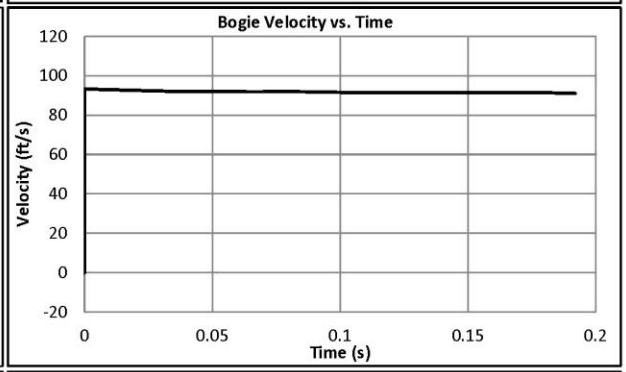

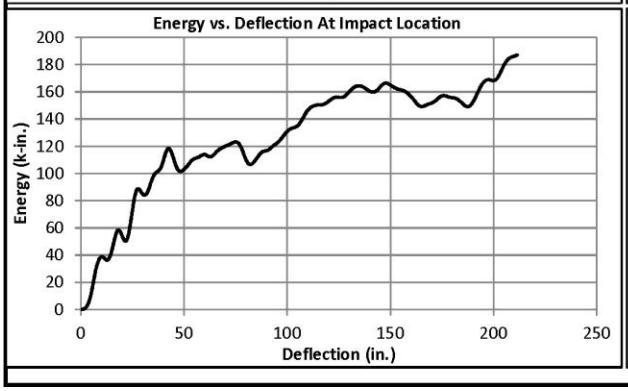

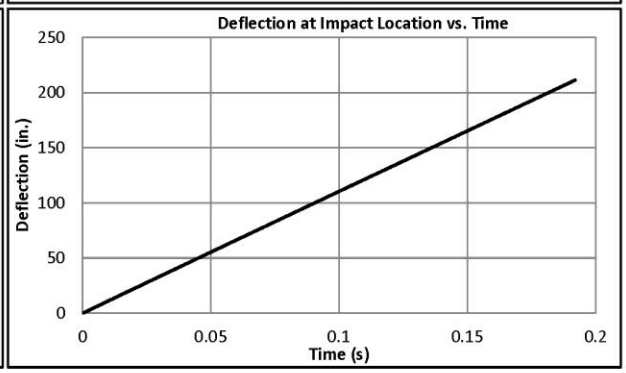

Figure L-1. Surrogate, Reusable, 1100C Vehicle Test Summary, Test No. UCSS-2 (SLICE-1)

MIDWEST ROADSIDE SAFETY FACILITY

Bogie Test Summary

Test Information

Test Description:	Single U-Channel Sign Supports
Test Number:	UCSS-2
Test Date:	8/4/2020
Failure Type:	N/A

Post Properties

Post Type:	NA
Post Size:	NA
Post Length:	NA
Embedment Depth:	NA
Orientation:	Longitudinal Axis - 0 Degrees

Soil Properties

Gradation:	102019
Moisture Content:	NA
Compaction Method:	NA

Bogie Properties

Impact Velocity:	63.63 mph	(93.32 ft/s)
Impact Height:	23 3/4	
Bogie Mass:	2432 lb	

Data Acquired

Accelerometer:	SLICE-2
Camera Data:	AOS-5

Test Results Summary

Event Duration:	0.1920	sec
Max. Deflection:	211.4	in.
Peak Force:	10.3	k
Initial Linear Stiffness:	0.4	k/in.
Total Energy:	193.3	k-in.

	@ 5"	@ 10"	@ 15"	@20"
Average Force (k)	1.74	3.87	2.84	2.85
Energy (k-in.)	8.7	38.7	42.6	57.0

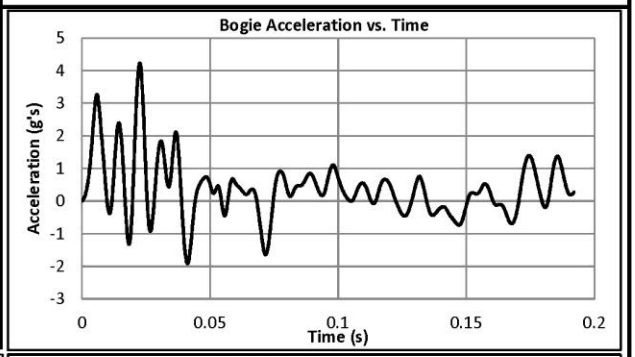

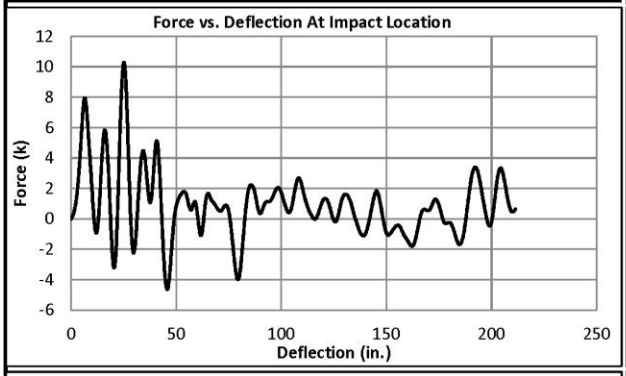

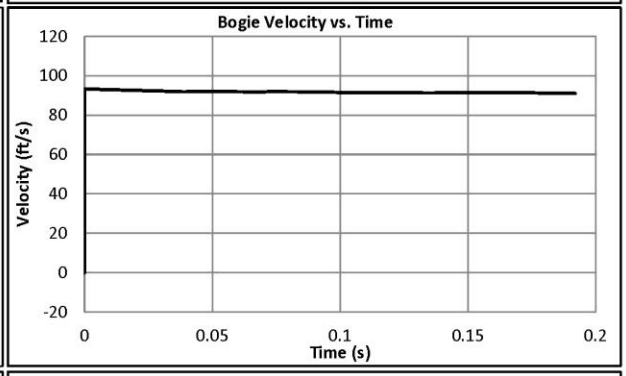

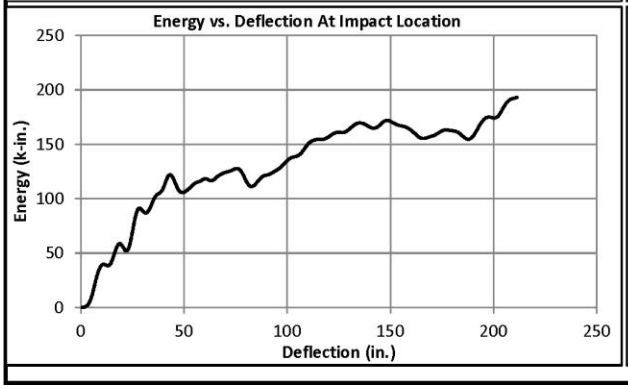

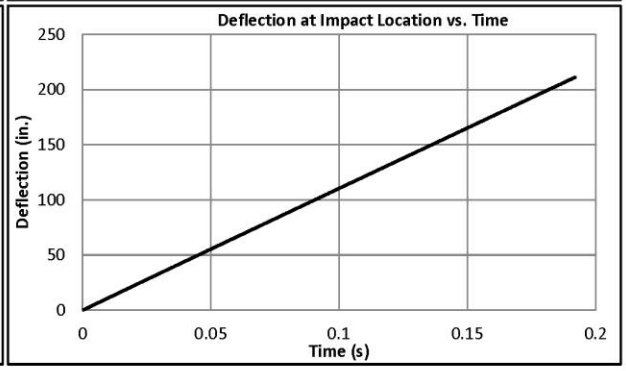

Figure L-2. Surrogate, Reusable, 1100C Vehicle Test Summary, Test No. UCSS-2 (SLICE-2)

MIDWEST ROADSIDE SAFETY FACILITY

Bogie Test Summary

Test Information

Test Description:	Single U-Channel Sign Supports
Test Number:	UCSS-3
Test Date:	8/19/2020
Failure Type:	Steel Shear

Post Properties

Post Type:	NA
Post Size:	NA
Post Length:	NA
Embedment Depth:	NA
Orientation:	Longitudinal Axis - 0 Degrees

Soil Properties

Gradation:	102019
Moisture Content:	N/A
Compaction Method:	N/A

Bogie Properties

Impact Velocity:	62.36 mph	(91.46 ft/s)
Impact Height:	23 3/4	
Bogie Mass:	2432 lb	

Data Acquired

Accelerometer:	SLICE-1
Camera Data:	AOS-9, AOS-10

Test Results Summary

Event Duration:	0.2030	sec
Max. Deflection:	217.6	in.
Peak Force:	23.8	k
Initial Linear Stiffness:	3.6	k/in.
Total Energy:	245.1	k-in.

	@ 5"	@ 10"	@ 15"	@20"
Average Force (k)	4.93	12.26	6.85	4.23
Energy (k-in.)	24.7	122.6	102.7	84.7

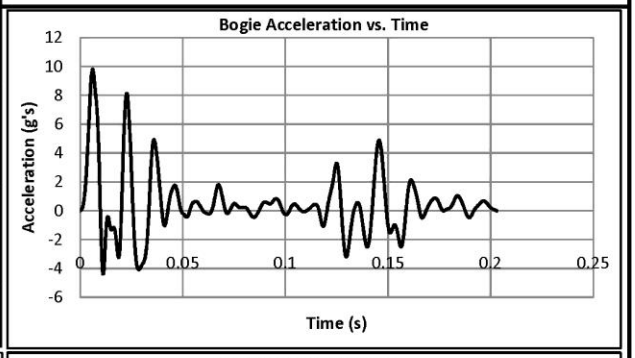

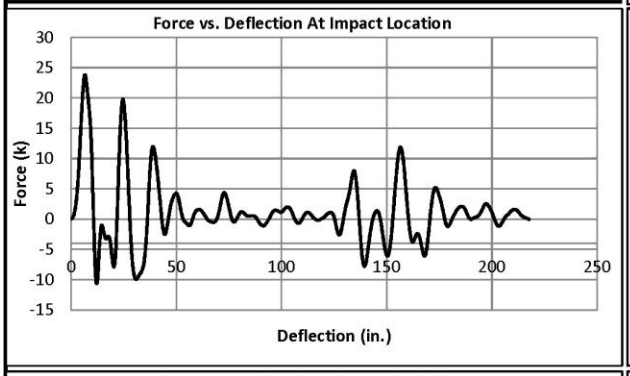

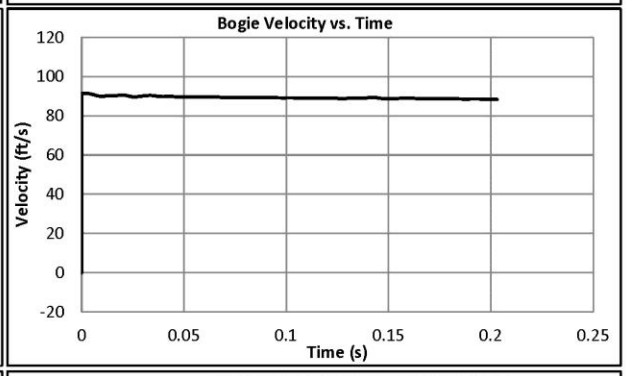

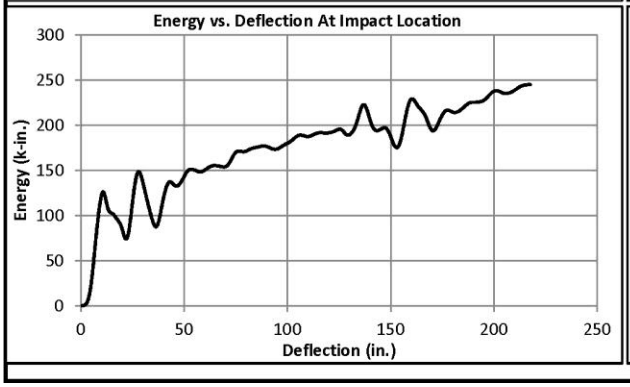

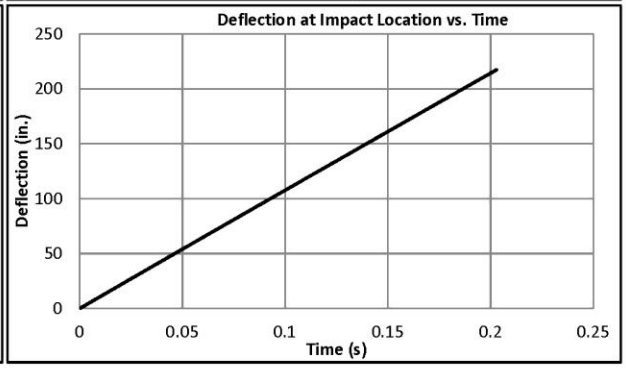

Figure L-3. Surrogate, Reusable, 1100C Vehicle Test Summary, Test No. UCSS-3 (SLICE-1)

MIDWEST ROADSIDE SAFETY FACILITY

Bogie Test Summary

Test Information

Test Description:	Single U-Channel Sign Supports
Test Number:	UCSS-3
Test Date:	8/19/2020
Failure Type:	Steel Shear

Post Properties

Post Type:	NA
Post Size:	NA
Post Length:	NA
Embedment Depth:	NA
Orientation:	Longitudinal Axis - 0 Degrees

Soil Properties

Gradation:	102019
Moisture Content:	N/A
Compaction Method:	N/A

Bogie Properties

Impact Velocity:	62.36 mph	(91.46 ft/s)
Impact Height:	23 3/4	
Bogie Mass:	2432 lb	

Data Acquired

Accelerometer:	SLICE-2
Camera Data:	AOS-9, AOS-10

Test Results Summary

Event Duration:	0.2030	sec
Max. Deflection:	217.7	in.
Peak Force:	21.6	k
Initial Linear Stiffness:	3.3	k/in.
Total Energy:	246.2	k-in.

	@ 5"	@ 10"	@ 15"	@20"
Average Force (k)	4.64	11.16	6.63	4.00
Energy (k-in.)	23.2	111.6	99.4	79.9

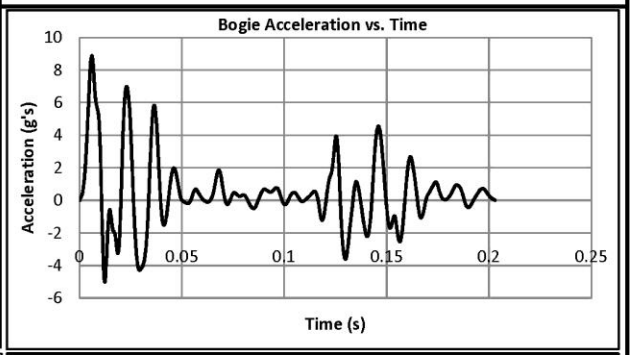

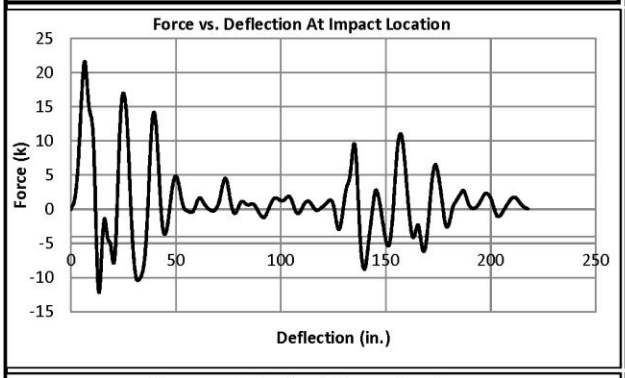

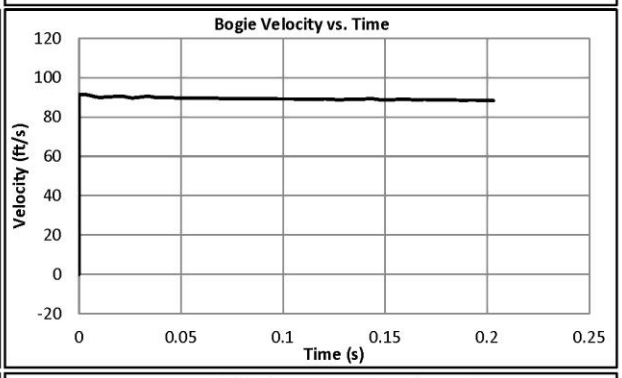

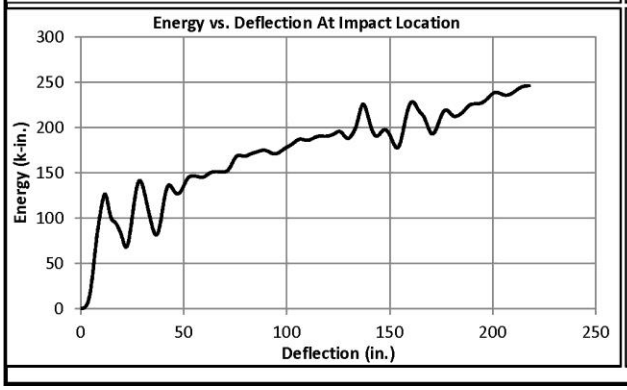

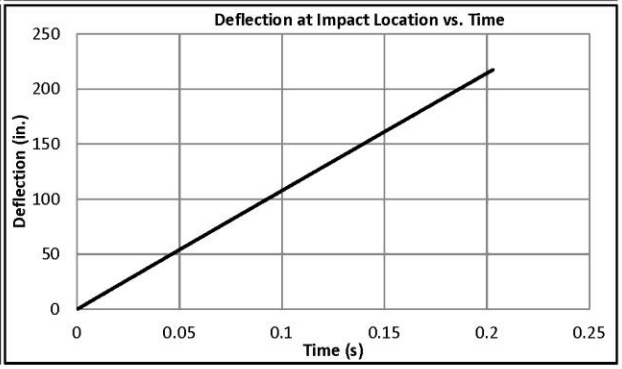

Figure L-4. Surrogate, Reusable, 1100C Vehicle Test Summary, Test No. UCSS-3 (SLICE-2)

MIDWEST ROADSIDE SAFETY FACILITY

Bogie Test Summary

Test Information

Test Description:	Single U-Channel Sign Supports
Test Number:	UCSS-4
Test Date:	8/20/2020
Failure Type:	Steel Shear

Post Properties

Post Type:	NA
Post Size:	NA
Post Length:	NA
Embedment Depth:	NA
Orientation:	Longitudinal Axis - 0 Degrees

Soil Properties

Gradation:	102019
Moisture Content:	N/A
Compaction Method:	N/A

Bogie Properties

Impact Velocity:	62.17 mph	(91.19 ft/s)
Impact Height:	23 3/4	
Bogie Mass:	2432 lb	

Data Acquired

Accelerometer:	SLICE-1
Camera Data:	AOS-9, AOS-10

Test Results Summary

Event Duration:	0.1903	sec
Max. Deflection:	204.6	in.
Peak Force:	26.1	k
Initial Linear Stiffness:	5.3	k/in.
Total Energy:	175.4	k-in.

	@ 5"	@ 10"	@ 15"	@20"
Average Force (k)	12.09	13.17	7.08	3.46
Energy (k-in.)	60.4	131.7	106.2	69.2

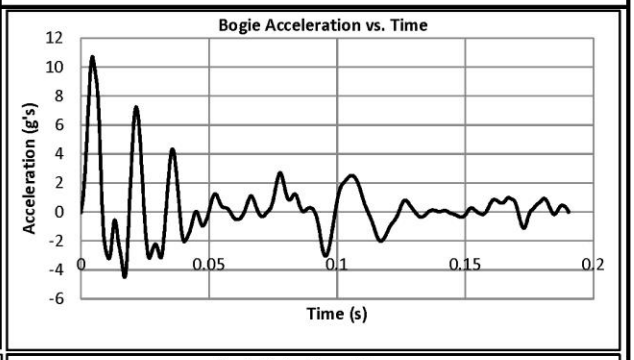

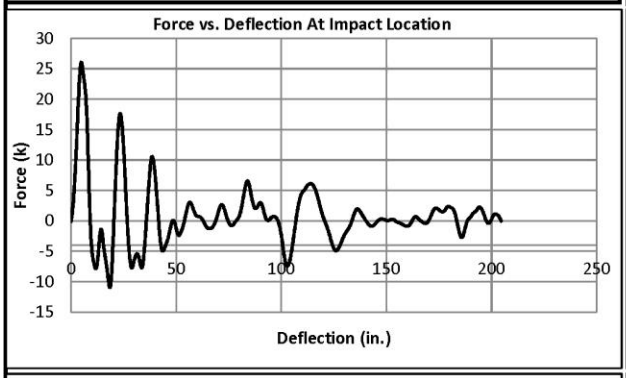

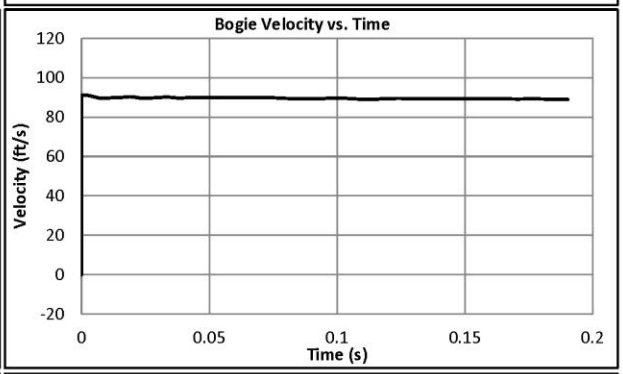

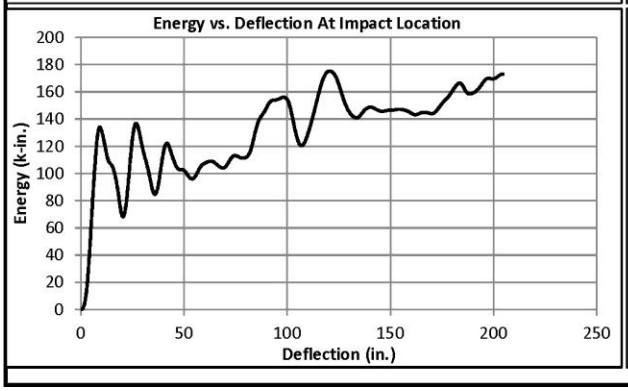

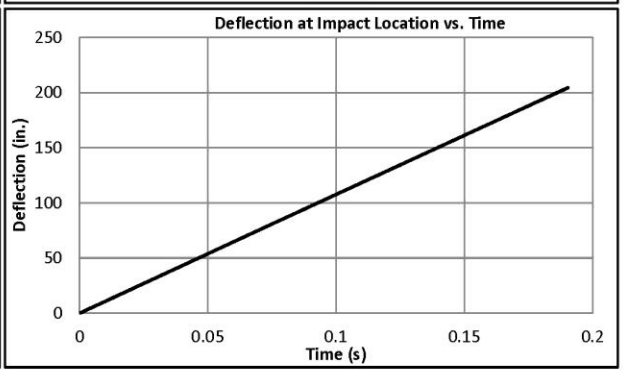

Figure L-5. Surrogate, Reusable, 1100C Vehicle Test Summary, Test No. UCSS-4 (SLICE-1)

MIDWEST ROADSIDE SAFETY FACILITY

Bogie Test Summary

Test Information

Test Description:	Single U-Channel Sign Supports
Test Number:	UCSS-4
Test Date:	8/20/2020
Failure Type:	Steel Shear

Post Properties

Post Type:	NA
Post Size:	NA
Post Length:	NA
Embedment Depth:	NA
Orientation:	Longitudinal Axis - 0 Degrees

Soil Properties

Gradation:	102019
Moisture Content:	N/A
Compaction Method:	N/A

Bogie Properties

Impact Velocity:	62.17 mph	(91.19 ft/s)
Impact Height:	23 3/4	
Bogie Mass:	2432 lb	

Data Acquired

Accelerometer:	SLICE-2
Camera Data:	AOS-9, AOS-10

Test Results Summary

Event Duration:	0.1903	sec
Max. Deflection:	204.8	in.
Peak Force:	22.4	k
Initial Linear Stiffness:	4.7	k/in.
Total Energy:	169.5	k-in.

	@ 5"	@ 10"	@ 15"	@20"
Average Force (k)	10.48	12.53	6.51	2.96
Energy (k-in.)	52.4	125.3	97.6	59.3

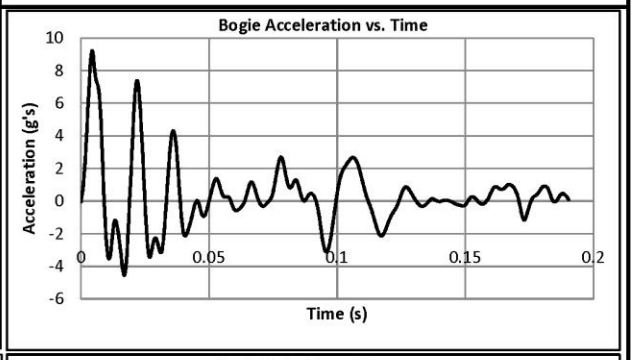

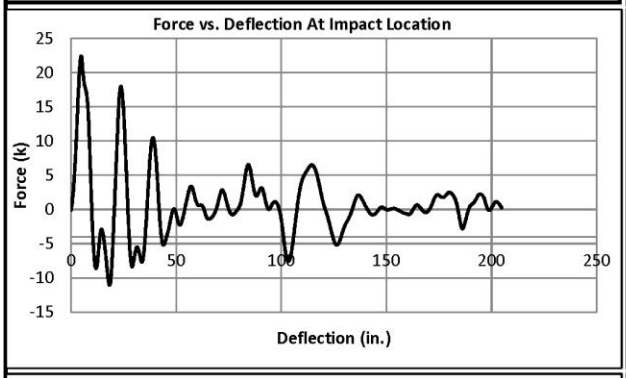

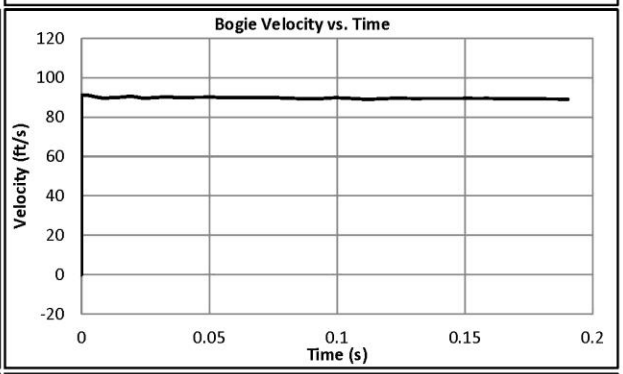

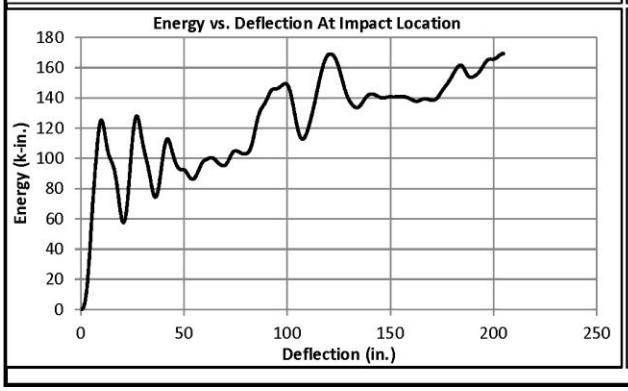

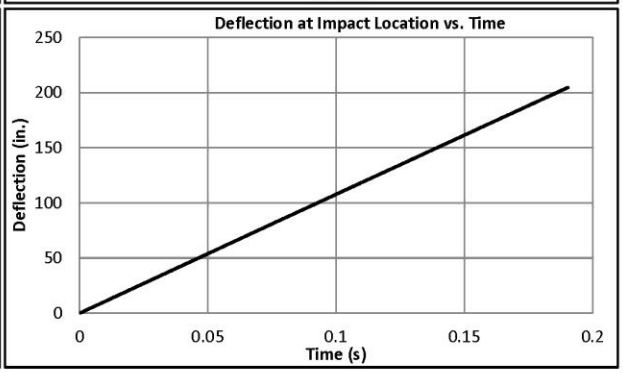

Figure L-6. Surrogate, Reusable, 1100C Vehicle Test Summary, Test No. UCSS-4 (SLICE-2)

MIDWEST ROADSIDE SAFETY FACILITY

Bogie Test Summary

Test Information

Test Description:	Single U-Channel Sign Supports
Test Number:	UCSS-5
Test Date:	11/17/2020
Failure Type:	Steel Shear

Post Properties

Post Type:	NA
Post Size:	NA
Post Length:	NA
Embedment Depth:	NA
Orientation:	Longitudinal Axis - 0 Degrees

Soil Properties

Gradation:	102019
Moisture Content:	N/A
Compaction Method:	N/A

Bogie Properties

Impact Velocity:	20.4 mph	(29.93 ft/s)
Impact Height:	23 3/4	
Bogie Mass:	2421 lb	

Data Acquired

Accelerometer:	SLICE-1
Camera Data:	AOS-9, AOS-10

Test Results Summary

Event Duration:	0.4000	sec
Max. Deflection:	117.8	in.
Peak Force:	14.4	k
Initial Linear Stiffness:	5.2	k/in.
Total Energy:	170.1	k-in.

	@ 5"	@ 10"	@ 15"	@20"
Average Force (k)	8.19	5.51	4.58	3.42
Energy (k-in.)	41.0	55.1	68.7	68.5

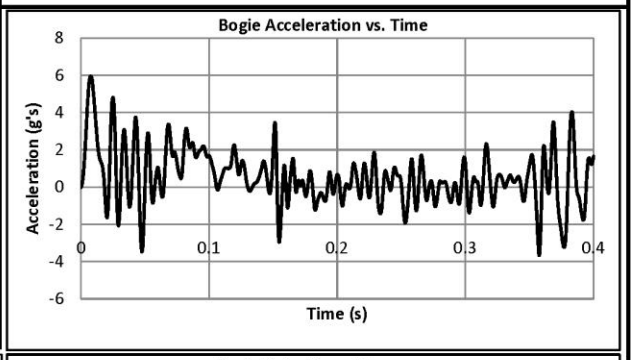

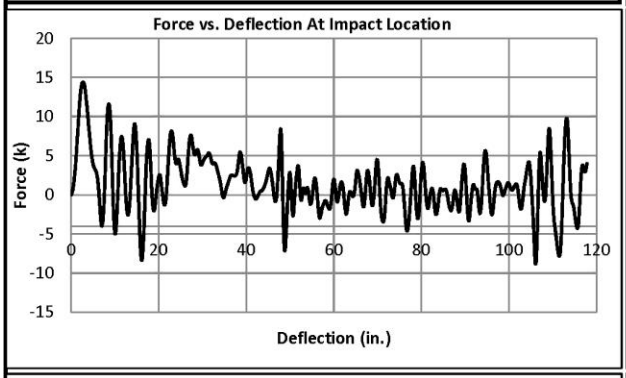

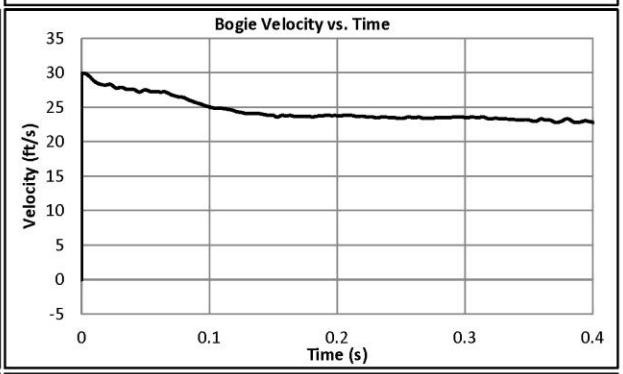

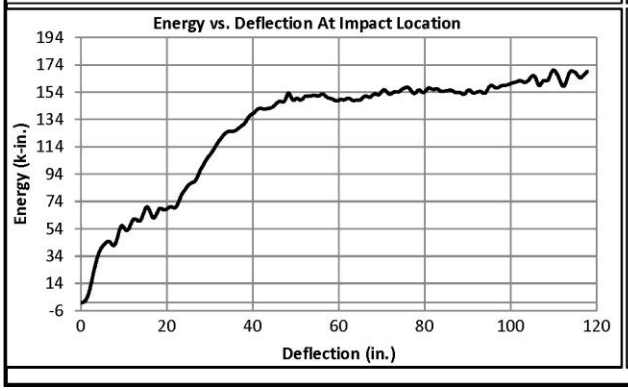

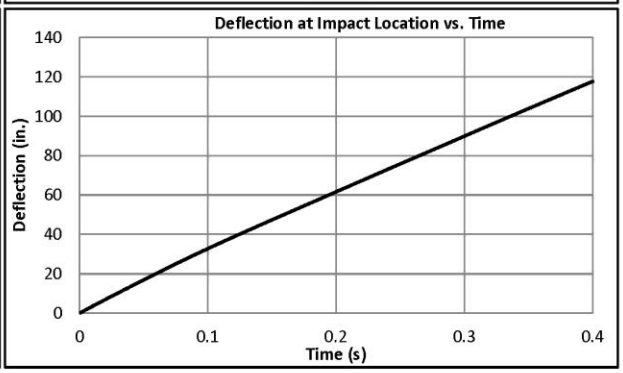

Figure L-7. Surrogate, Reusable, 1100C Vehicle Test Summary, Test No. UCSS-5 (SLICE-1)

MIDWEST ROADSIDE SAFETY FACILITY

Bogie Test Summary

Test Information

Test Description:	Single U-Channel Sign Supports
Test Number:	UCSS-5
Test Date:	11/17/2020
Failure Type:	Steel Shear

Post Properties

Post Type:	NA
Post Size:	NA
Post Length:	NA
Embedment Depth:	NA
Orientation:	Longitudinal Axis - 0 Degrees

Soil Properties

Gradation:	102019
Moisture Content:	N/A
Compaction Method:	N/A

Bogie Properties

Impact Velocity:	20.4 mph	(29.93 ft/s)
Impact Height:	23 3/4	
Bogie Mass:	2421 lb	

Data Acquired

Accelerometer:	SLICE-2
Camera Data:	AOS-9, AOS-10

Test Results Summary

Event Duration:	0.4000	sec
Max. Deflection:	117.6	in.
Peak Force:	14.1	k
Initial Linear Stiffness:	4.9	k/in.
Total Energy:	170.7	k-in.

	@ 5"	@ 10"	@ 15"	@20"
Average Force (k)	8.21	5.50	4.58	3.46
Energy (k-in.)	41.1	55.0	68.7	69.3

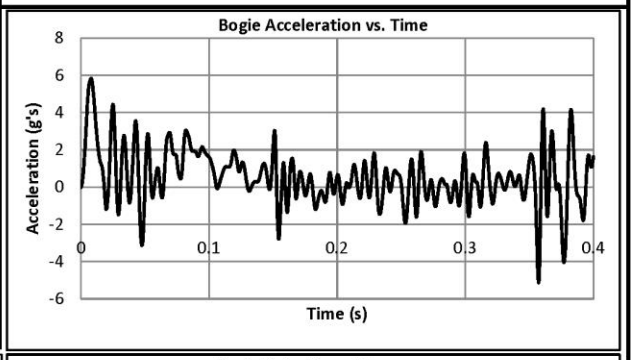

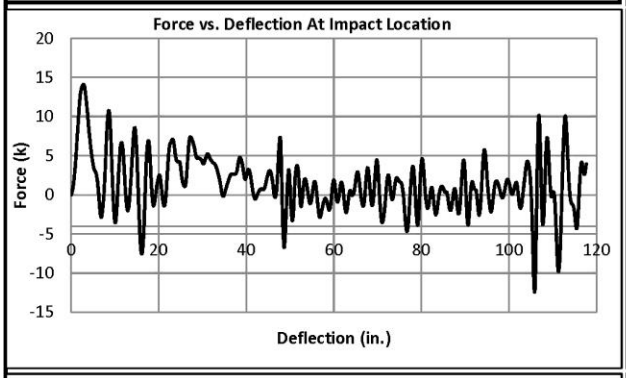

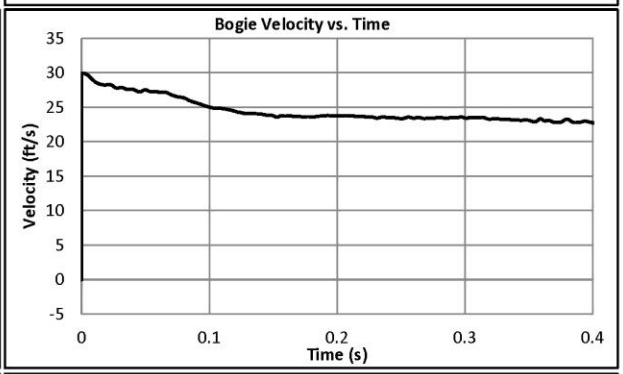

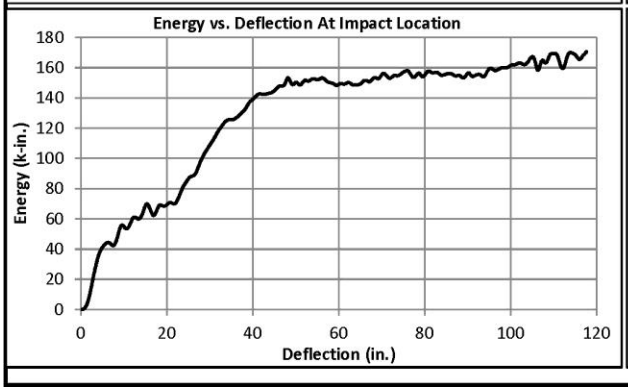

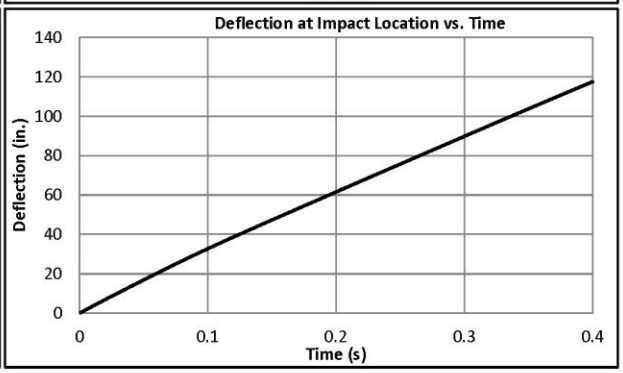

Figure L-8. Surrogate, Reusable, 1100C Vehicle Test Summary, Test No. UCSS-5 (SLICE-2)

MIDWEST ROADSIDE SAFETY FACILITY

Bogie Test Summary

Test Information

Test Description:	Single U-Channel Sign Supports
Test Number:	UCSS-6
Test Date:	11/19/2020
Failure Type:	Steel Shear

Post Properties

Post Type:	NA
Post Size:	NA
Post Length:	NA
Embedment Depth:	NA
Orientation:	Longitudinal Axis - 0 Degrees

Soil Properties

Gradation:	102019
Moisture Content:	N/A
Compaction Method:	N/A

Bogie Properties

Impact Velocity:	62.46 mph	(91.61 ft/s)
Impact Height:	23 3/4	
Bogie Mass:	2421 lb	

Data Acquired

Accelerometer:	SLICE-1
Camera Data:	AOS-5, AOS-9

Test Results Summary

Event Duration:	0.2000	sec
Max. Deflection:	214.1	in.
Peak Force:	20.6	k
Initial Linear Stiffness:	0.2	k/in.
Total Energy:	263.6	k-in.

	@ 5"	@ 10"	@ 15"	@20"
Average Force (k)	8.99	11.50	5.80	5.80
Energy (k-in.)	44.9	115.0	86.9	116.0

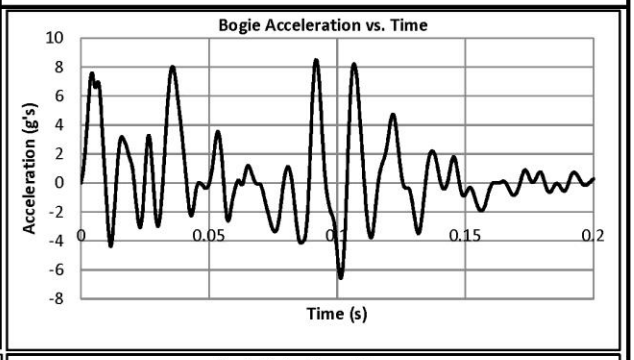

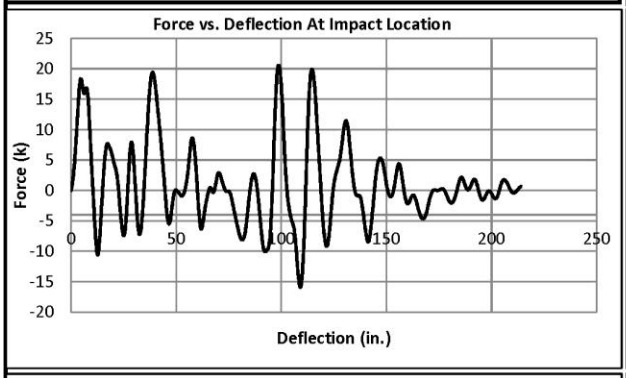

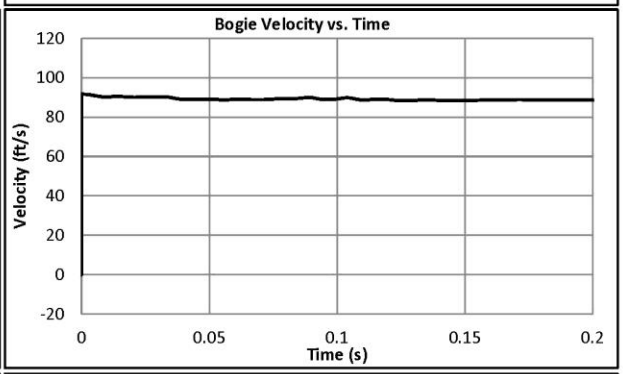

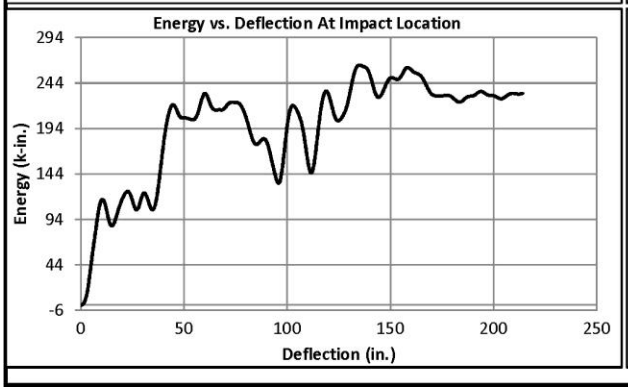

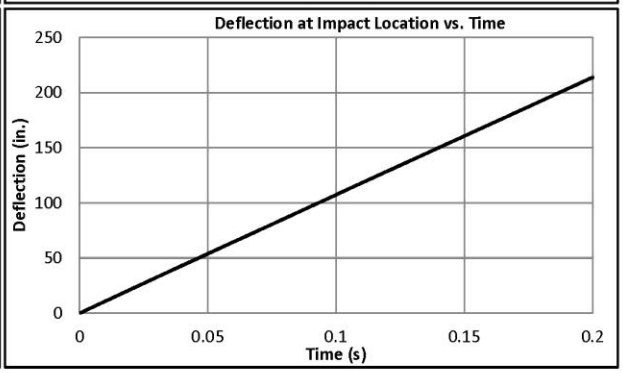

Figure L-9. Surrogate, Reusable, 1100C Vehicle Test Summary, Test No. UCSS-6 (SLICE-1)

MIDWEST ROADSIDE SAFETY FACILITY

Bogie Test Summary

Test Information

Test Description:	Single U-Channel Sign Supports
Test Number:	UCSS-6
Test Date:	11/19/2020
Failure Type:	Steel Shear

Post Properties

Post Type:	NA
Post Size:	NA
Post Length:	NA
Embedment Depth:	NA
Orientation:	Longitudinal Axis - 0 Degrees

Soil Properties

Gradation:	102019
Moisture Content:	N/A
Compaction Method:	N/A

Bogie Properties

Impact Velocity:	62.46 mph	(91.61 ft/s)
Impact Height:	23 3/4	
Bogie Mass:	2421 lb	

Data Acquired

Accelerometer:	SLICE-2
Camera Data:	AOS-5, AOS-9

Test Results Summary

Event Duration:	0.2000	sec
Max. Deflection:	213.9	in.
Peak Force:	27.2	k
Initial Linear Stiffness:	0.2	k/in.
Total Energy:	274.5	k-in.

	@ 5"	@ 10"	@ 15"	@20"
Average Force (k)	9.24	12.55	5.56	5.92
Energy (k-in.)	46.2	125.5	83.3	118.3

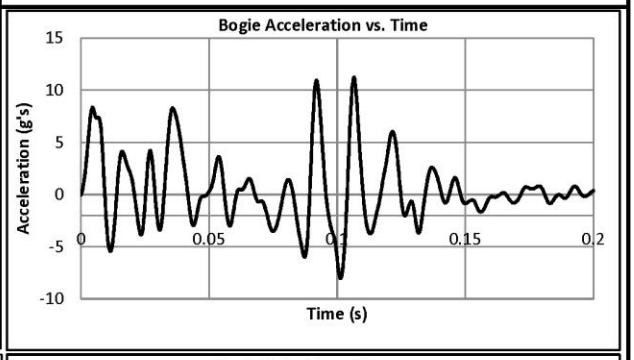

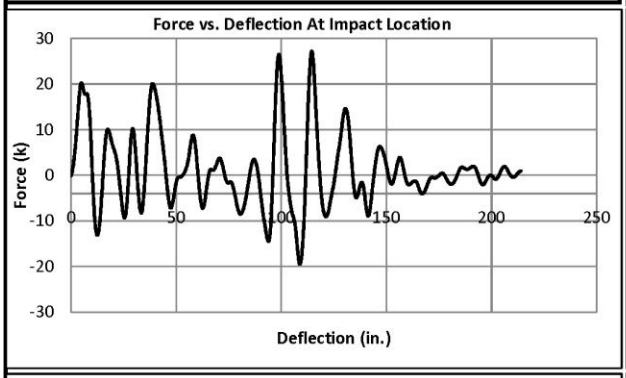

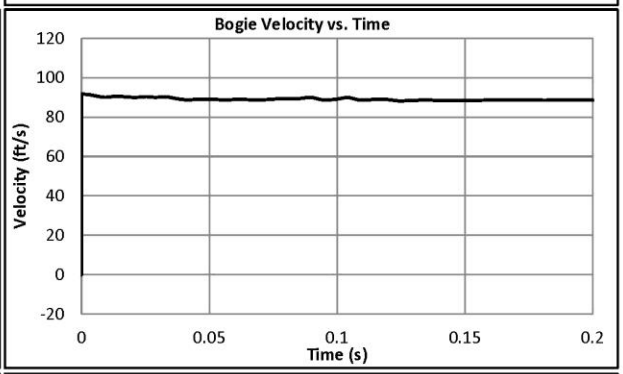

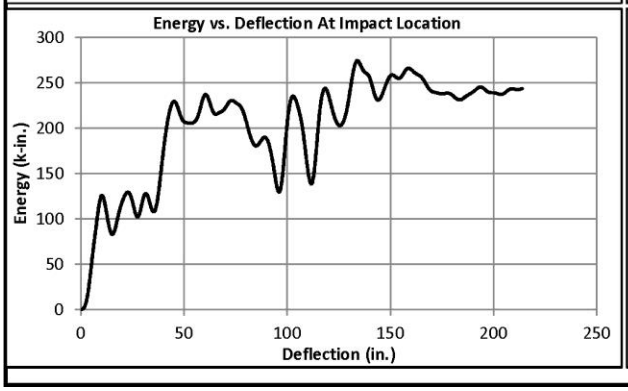

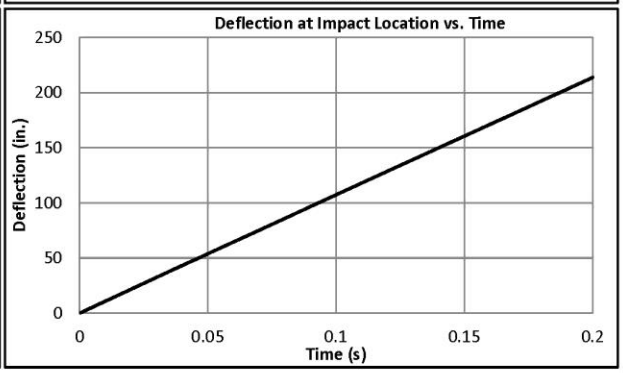

Figure L-10. Surrogate, Reusable, 1100C Vehicle Test Summary, Test No. UCSS-6 (SLICE-2)

MIDWEST ROADSIDE SAFETY FACILITY

Bogie Test Summary

Test Information

Test Description:	Single U-Channel Sign Supports
Test Number:	UCSS-7
Test Date:	11/4/2020
Failure Type:	Steel Shear

Post Properties

Post Type:	NA
Post Size:	NA
Post Length:	NA
Embedment Depth:	NA
Orientation:	Longitudinal Axis - 0 Degrees

Soil Properties

Gradation:	102019
Moisture Content:	N/A
Compaction Method:	N/A

Bogie Properties

Impact Velocity:	19.82 mph	(29.07 ft/s)
Impact Height:	23 3/4	
Bogie Mass:	2408 lb	

Data Acquired

Accelerometer:	SLICE-1
Camera Data:	AOS-9, AOS-10

Test Results Summary

Event Duration:	0.5000	sec
Max. Deflection:	166.8	in.
Peak Force:	11.8	k
Initial Linear Stiffness:	4.0	k/in.
Total Energy:	44.2	k-in.

	@ 5"	@ 10"	@ 15"	@20"
Average Force (k)	5.38	2.43	1.38	0.97
Energy (k-in.)	26.9	24.3	20.7	19.3

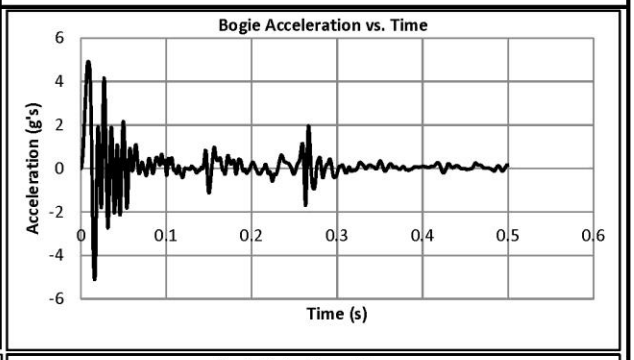

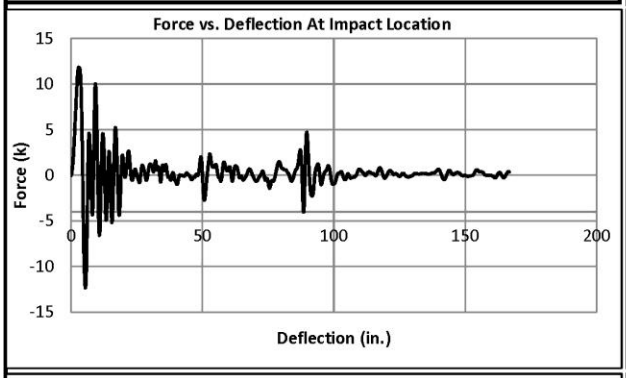

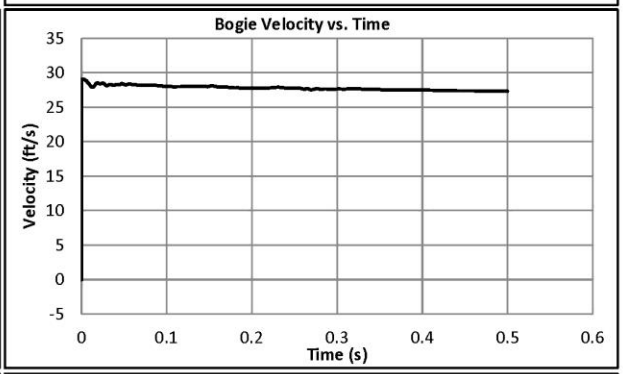

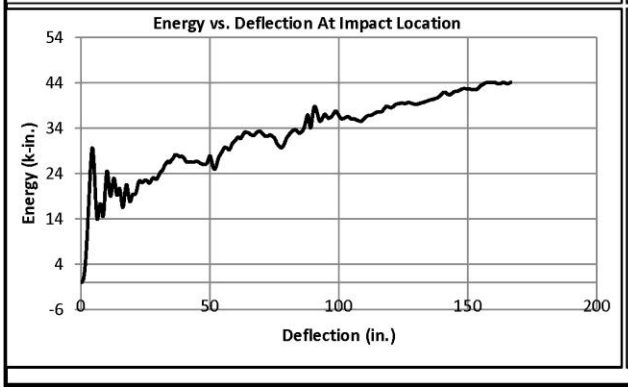

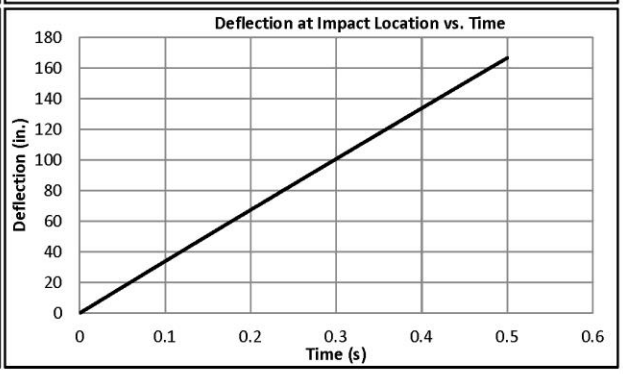

Figure L-11. Surrogate, Reusable, 1100C Vehicle Test Summary, Test No. UCSS-7 (SLICE-1)

MIDWEST ROADSIDE SAFETY FACILITY

Bogie Test Summary

Test Information

Test Description:	Single U-Channel Sign Supports
Test Number:	UCSS-7
Test Date:	11/4/2020
Failure Type:	Steel Shear

Post Properties

Post Type:	NA
Post Size:	NA
Post Length:	NA
Embedment Depth:	NA
Orientation:	Longitudinal Axis - 0 Degrees

Soil Properties

Gradation:	102019
Moisture Content:	N/A
Compaction Method:	N/A

Bogie Properties

Impact Velocity:	19.82 mph	(29.07 ft/s)
Impact Height:	23 3/4	
Bogie Mass:	2408 lb	

Data Acquired

Accelerometer:	SLICE-2
Camera Data:	AOS-9, AOS-10

Test Results Summary

Event Duration:	0.5000	sec
Max. Deflection:	167.5	in.
Peak Force:	13.1	k
Initial Linear Stiffness:	1.4	k/in.
Total Energy:	37.9	k-in.

	@ 5"	@ 10"	@ 15"	@20"
Average Force (k)	5.46	2.43	1.28	0.88
Energy (k-in.)	27.3	24.3	19.2	17.6

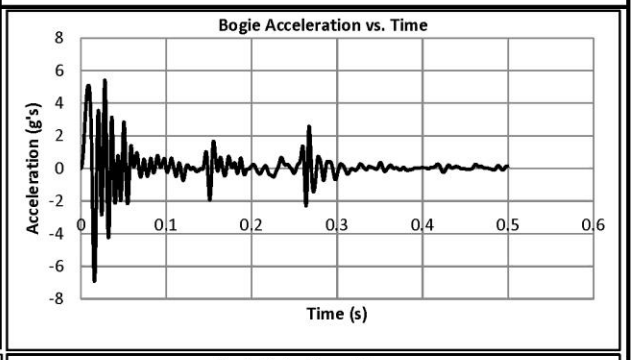

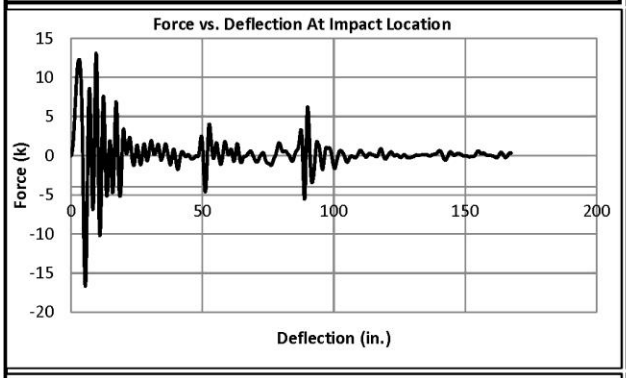

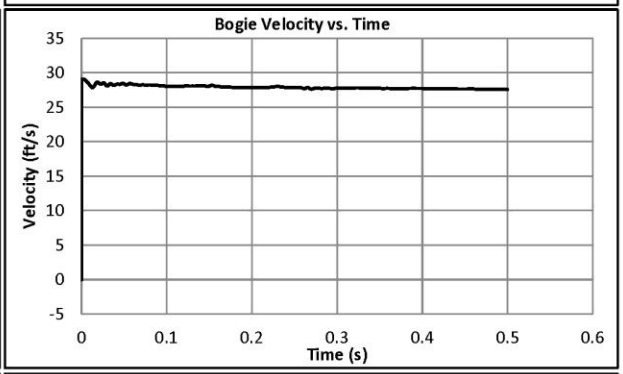

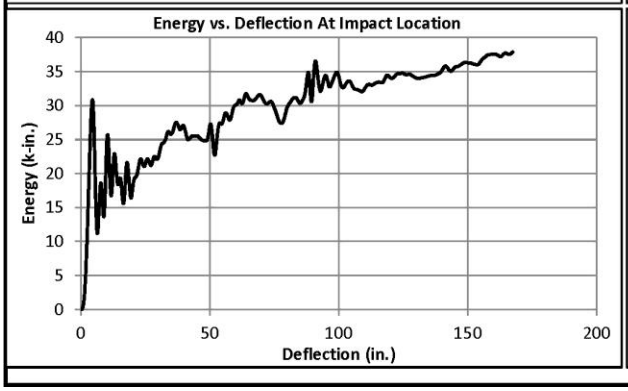

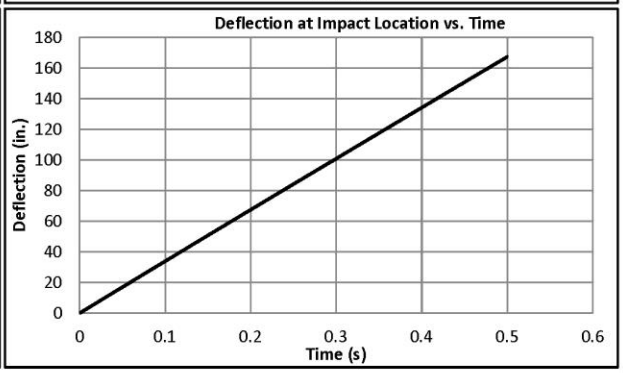

Figure L-12. Surrogate, Reusable, 1100C Vehicle Test Summary, Test No. UCSS-7 (SLICE-2)

MIDWEST ROADSIDE SAFETY FACILITY

Bogie Test Summary

Test Information

Test Description:	Single U-Channel Sign Supports
Test Number:	UCSS-8
Test Date:	11/5/2020
Failure Type:	Steel Shear

Post Properties

Post Type:	NA
Post Size:	NA
Post Length:	NA
Embedment Depth:	NA
Orientation:	Longitudinal Axis - 0 Degrees

Soil Properties

Gradation:	102019
Moisture Content:	N/A
Compaction Method:	N/A

Bogie Properties

Impact Velocity:	63.13 mph	(92.59 ft/s)
Impact Height:	23 3/4	
Bogie Mass:	2408 lb	

Data Acquired

Accelerometer:	SLICE-1
Camera Data:	AOS-9, AOS-10

Test Results Summary

Event Duration:	0.2200	sec
Max. Deflection:	237.1	in.
Peak Force:	23.7	k
Initial Linear Stiffness:	4.8	k/in.
Total Energy:	321.1	k-in.

	@ 5"	@ 10"	@ 15"	@20"
Average Force (k)	11.33	9.71	3.15	3.12
Energy (k-in.)	56.7	97.1	47.3	62.4

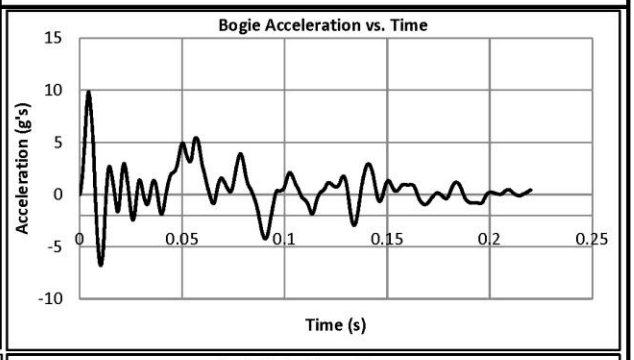

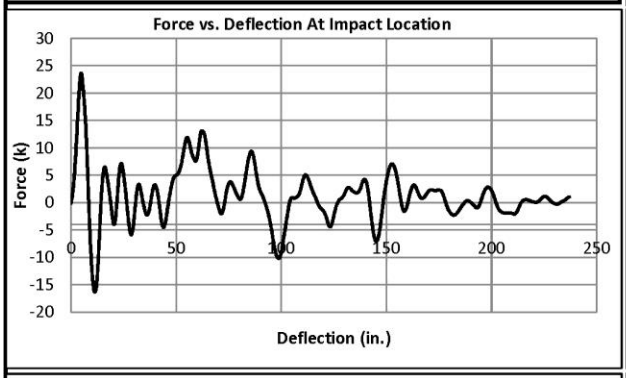

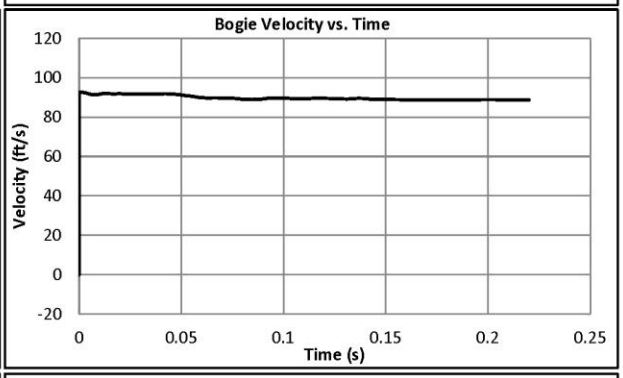

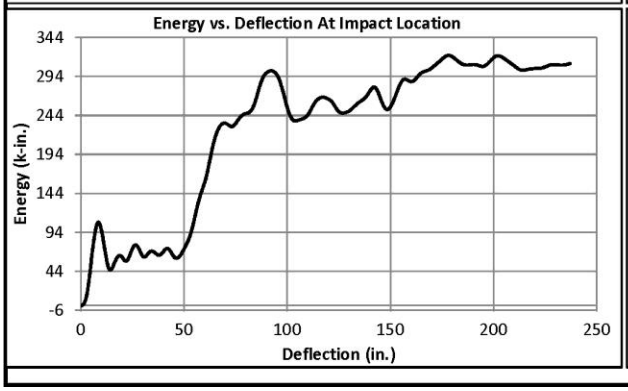

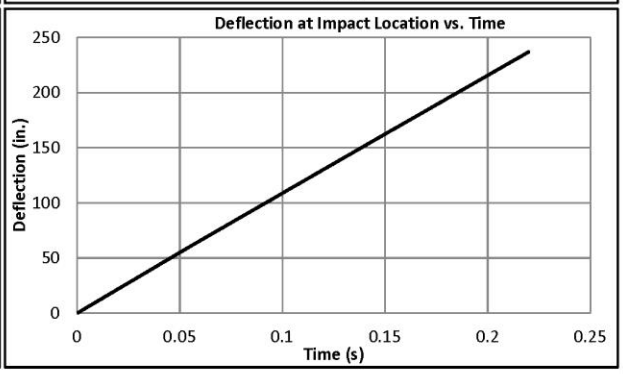

Figure L-13. Surrogate, Reusable, 1100C Vehicle Test Summary, Test No. UCSS-8 (SLICE-1)

MIDWEST ROADSIDE SAFETY FACILITY

Bogie Test Summary

Test Information

Test Description:	Single U-Channel Sign Supports
Test Number:	UCSS-8
Test Date:	11/5/2020
Failure Type:	Steel Shear

Post Properties

Post Type:	NA
Post Size:	NA
Post Length:	NA
Embedment Depth:	NA
Orientation:	Longitudinal Axis - 0 Degrees

Soil Properties

Gradation:	102019
Moisture Content:	N/A
Compaction Method:	N/A

Bogie Properties

Impact Velocity:	63.13 mph	(92.59 ft/s)
Impact Height:	23 3/4	
Bogie Mass:	2408 lb	

Data Acquired

Accelerometer:	SLICE-2
Camera Data:	AOS-9, AOS-10

Test Results Summary

Event Duration:	0.2200	sec
Max. Deflection:	237.5	in.
Peak Force:	24.5	k
Initial Linear Stiffness:	5.0	k/in.
Total Energy:	302.2	k-in.

	@ 5"	@ 10"	@ 15"	@20"
Average Force (k)	11.70	9.99	2.21	2.70
Energy (k-in.)	58.5	99.9	33.1	54.0

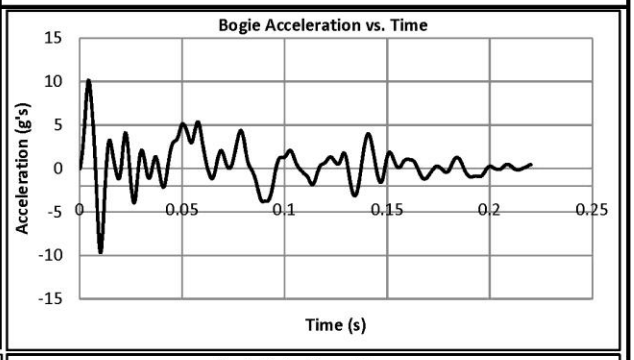

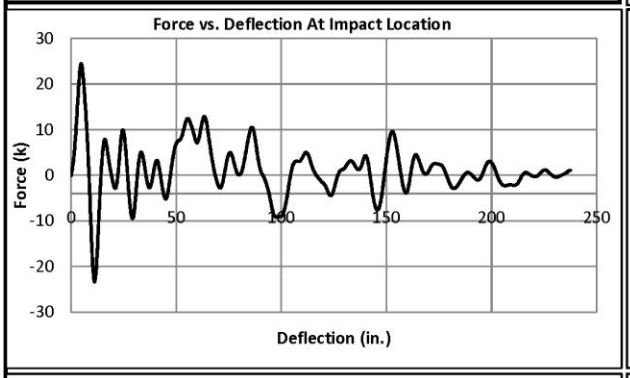

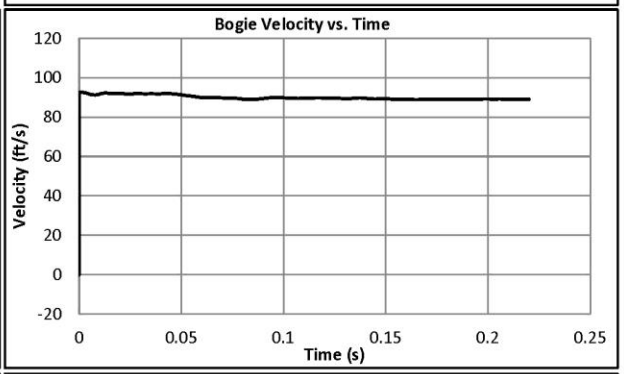

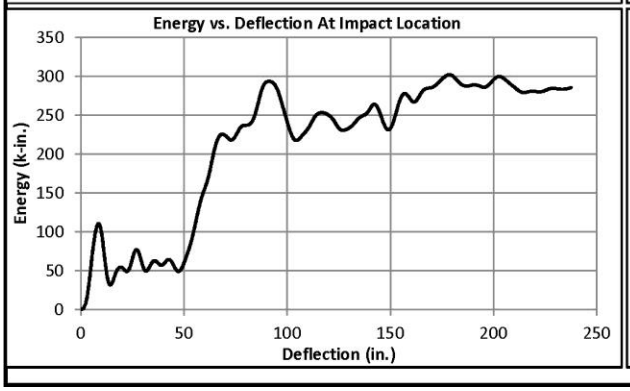

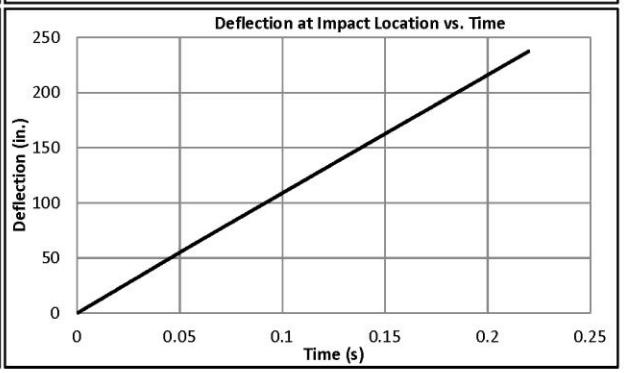

Figure L-14. Surrogate, Reusable, 1100C Vehicle Test Summary, Test No. UCSS-8 (SLICE-2)

MIDWEST ROADSIDE SAFETY FACILITY

Bogie Test Summary

Test Information

Test Description:	Single U-Channel Sign Supports
Test Number:	UCSS-9
Test Date:	11/17/2020
Failure Type:	Steel Shear

Post Properties

Post Type:	NA
Post Size:	NA
Post Length:	NA
Embedment Depth:	NA
Orientation:	Longitudinal Axis - 0 Degrees

Soil Properties

Gradation:	102019
Moisture Content:	N/A
Compaction Method:	N/A

Bogie Properties

Impact Velocity:	63.82 mph	(93.6 ft/s)
Impact Height:	23 3/4	
Bogie Mass:	2421 lb	

Data Acquired

Accelerometer:	SLICE-1
Camera Data:	AOS-9, AOS-10

Test Results Summary

Event Duration:	0.2200	sec
Max. Deflection:	245.2	in.
Peak Force:	11.4	k
Initial Linear Stiffness:	0.8	k/in.
Total Energy:	86.8	k-in.

	@ 5"	@ 10"	@ 15"	@20"
Average Force (k)	5.03	1.67	1.95	1.66
Energy (k-in.)	25.2	16.7	29.2	33.2

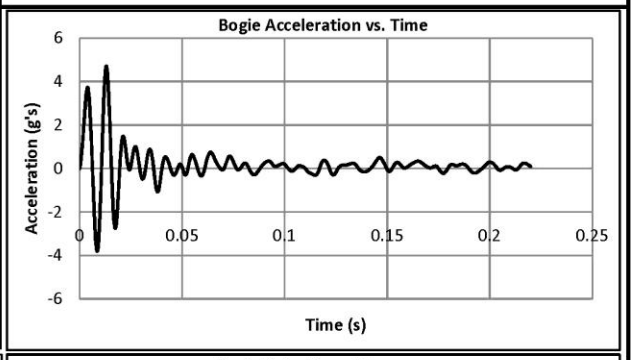

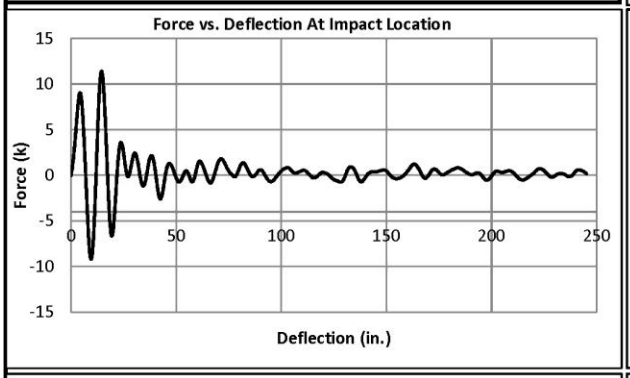

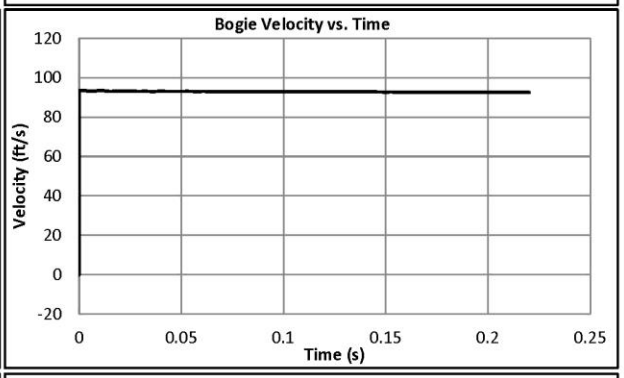

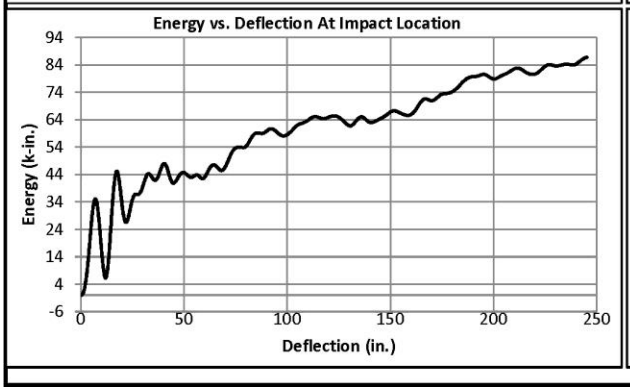

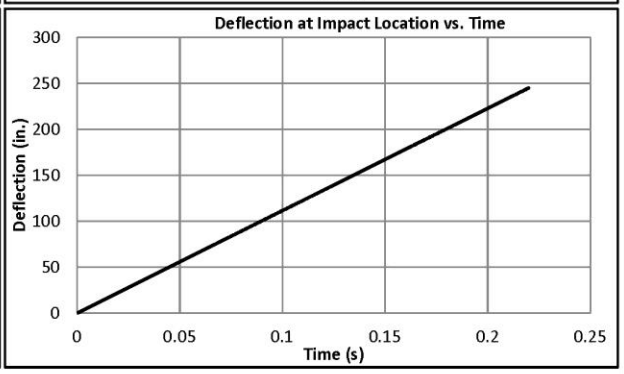

Figure L-15. Surrogate, Reusable, 1100C Vehicle Test Summary, Test No. UCSS-9 (SLICE-1)

MIDWEST ROADSIDE SAFETY FACILITY

Bogie Test Summary

Test Information

Test Description:	Single U-Channel Sign Supports
Test Number:	UCSS-9
Test Date:	11/17/2020
Failure Type:	Steel Shear

Post Properties

Post Type:	NA
Post Size:	NA
Post Length:	NA
Embedment Depth:	NA
Orientation:	Longitudinal Axis - 0 Degrees

Soil Properties

Gradation:	102019
Moisture Content:	N/A
Compaction Method:	N/A

Bogie Properties

Impact Velocity:	63.82 mph	(93.6 ft/s)
Impact Height:	23 3/4	
Bogie Mass:	2421 lb	

Data Acquired

Accelerometer:	SLICE-2
Camera Data:	AOS-9, AOS-10

Test Results Summary

Event Duration:	0.2200	sec
Max. Deflection:	245.2	in.
Peak Force:	9.5	k
Initial Linear Stiffness:	0.6	k/in.
Total Energy:	82.8	k-in.

	@ 5"	@ 10"	@ 15"	@20"
Average Force (k)	4.72	2.22	1.84	1.84
Energy (k-in.)	23.6	22.2	27.6	36.8

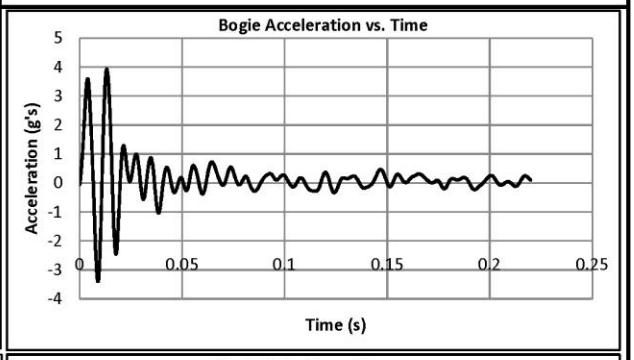

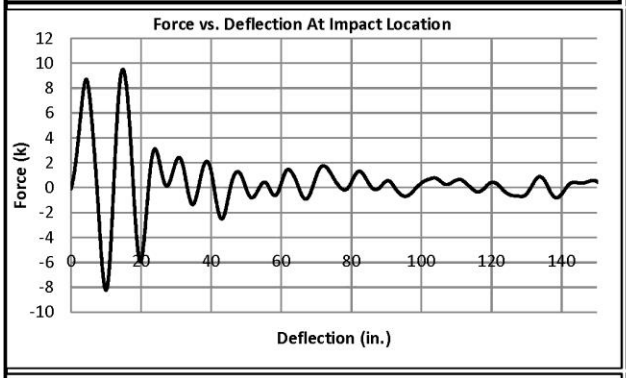

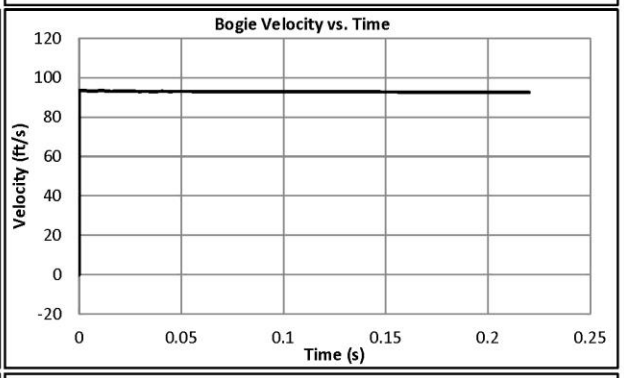

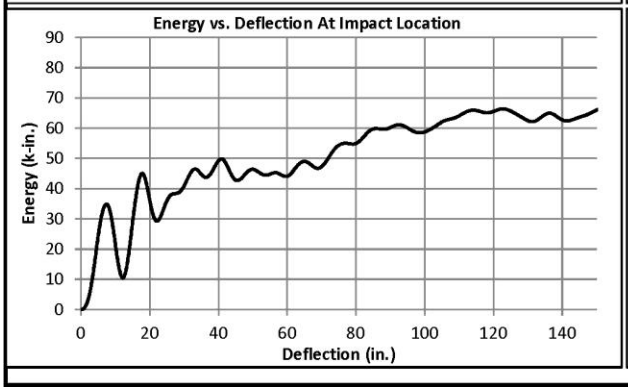

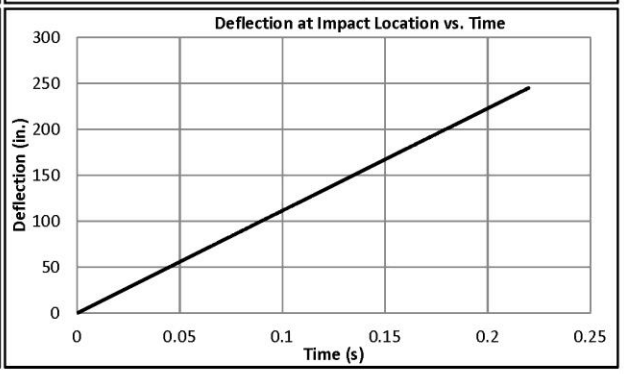

Figure L-16. Surrogate, Reusable, 1100C Vehicle Test Summary, Test No. UCSS-9 (SLICE-2)

MIDWEST ROADSIDE SAFETY FACILITY

Bogie Test Summary

Test Information

Test Description:	Single U-Channel Sign Supports
Test Number:	UCSS-10
Test Date:	12/2/2020
Failure Type:	Steel Shear

Post Properties

Post Type:	NA
Post Size:	NA
Post Length:	NA
Embedment Depth:	NA
Orientation:	Longitudinal Axis - 0 Degrees

Soil Properties

Gradation:	102019
Moisture Content:	N/A
Compaction Method:	N/A

Bogie Properties

Impact Velocity:	62.36 mph	(91.46 ft/s)
Impact Height:	23 3/4	
Bogie Mass:	2421 lb	

Data Acquired

Accelerometer:	SLICE-1
Camera Data:	AOS-10, AOS-9

Test Results Summary

Event Duration:	0.1250	sec
Max. Deflection:	133.9	in.
Peak Force:	22.1	k
Initial Linear Stiffness:	4.7	k/in.
Total Energy:	258.9	k-in.

	@ 5"	@ 10"	@ 15"	@20"
Average Force (k)	11.03	13.24	5.94	5.39
Energy (k-in.)	55.2	132.4	89.2	107.7

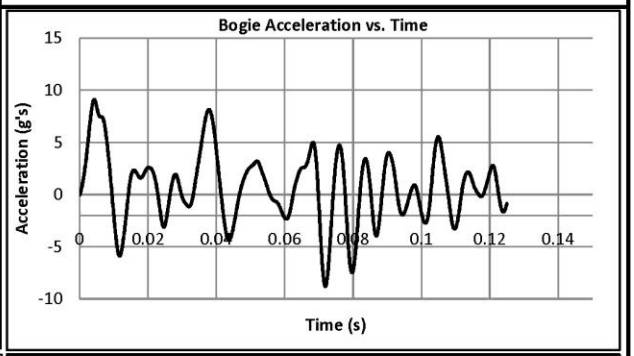

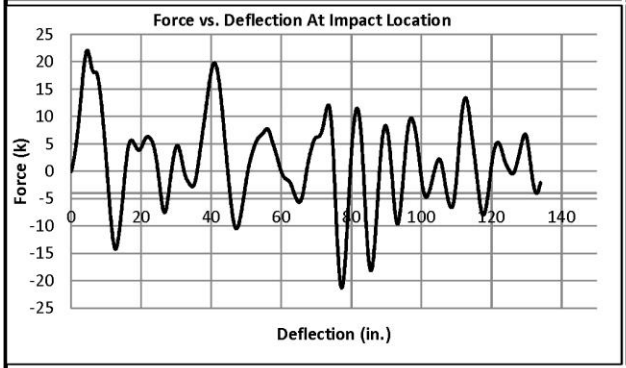

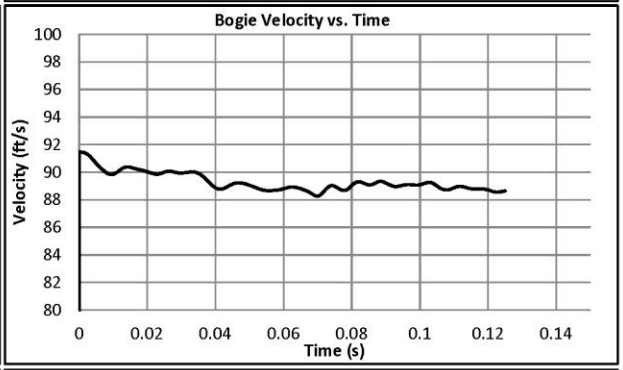

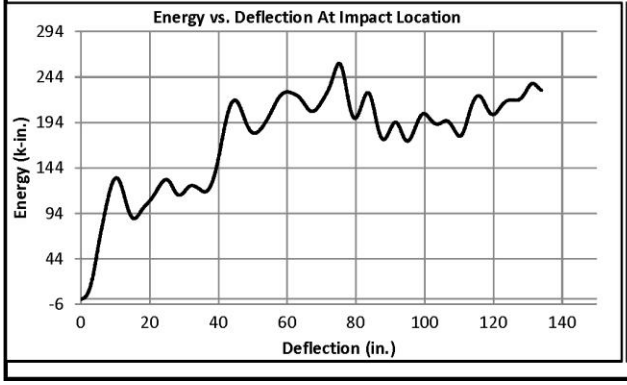

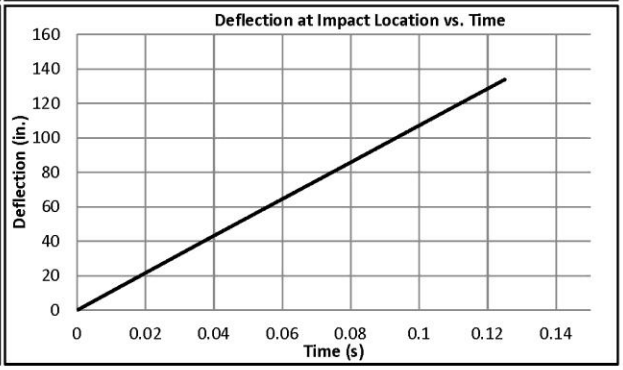

Figure L-17. Surrogate, Reusable, 1100C Vehicle Test Summary, Test No. UCSS-10 (SLICE-1)

MIDWEST ROADSIDE SAFETY FACILITY

Bogie Test Summary

Test Information

Test Description:	Single U-Channel Sign Supports
Test Number:	UCSS-10
Test Date:	12/2/2020
Failure Type:	Steel Shear

Post Properties

Post Type:	NA
Post Size:	NA
Post Length:	NA
Embedment Depth:	NA
Orientation:	Longitudinal Axis - 0 Degrees

Soil Properties

Gradation:	102019
Moisture Content:	N/A
Compaction Method:	N/A

Bogie Properties

Impact Velocity:	62.36 mph	(91.46 ft/s)
Impact Height:	23 3/4	
Bogie Mass:	2421 lb	

Data Acquired

Accelerometer:	SLICE-2
Camera Data:	AOS-10, AOS-9

Test Results Summary

Event Duration:	0.1250	sec
Max. Deflection:	134.1	in.
Peak Force:	21.1	k
Initial Linear Stiffness:	4.5	k/in.
Total Energy:	255.1	k-in.

	@ 5"	@ 10"	@ 15"	@20"
Average Force (k)	10.31	13.27	5.94	5.20
Energy (k-in.)	51.5	132.7	89.2	104.1

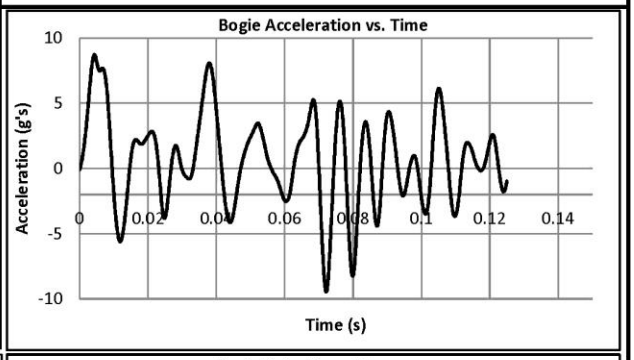

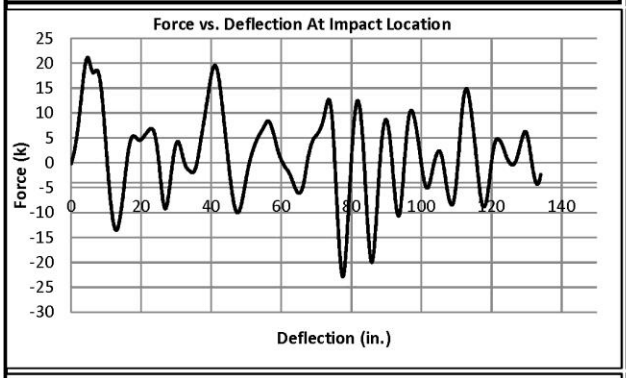

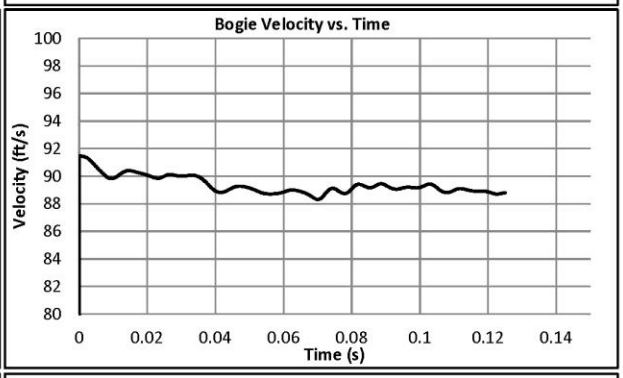

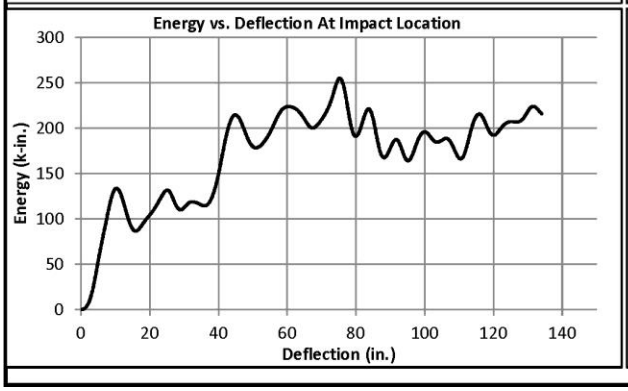

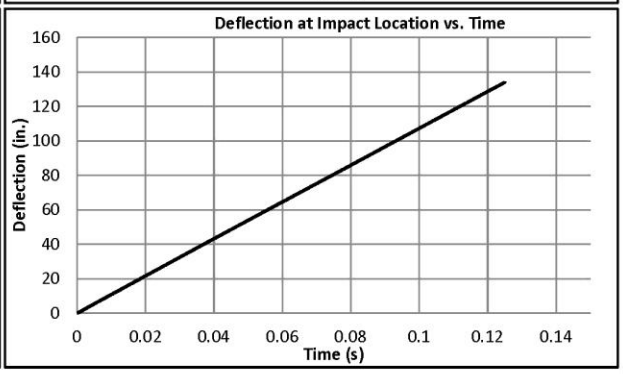

Figure L-18. Surrogate, Reusable, 1100C Vehicle Test Summary, Test No. UCSS-10 (SLICE-2)

MIDWEST ROADSIDE SAFETY FACILITY

Bogie Test Summary

Test Information

Test Description:	Single U-Channel Sign Supports
Test Number:	UCSS-11
Test Date:	12/4/2020
Failure Type:	Steel Shear

Post Properties

Post Type:	NA
Post Size:	NA
Post Length:	NA
Embedment Depth:	NA
Orientation:	Longitudinal Axis - 0 Degrees

Soil Properties

Gradation:	102019
Moisture Content:	N/A
Compaction Method:	N/A

Bogie Properties

Impact Velocity:	61.06 mph	(89.56 ft/s)
Impact Height:	23 3/4	
Bogie Mass:	2421 lb	

Data Acquired

Accelerometer:	SLICE-1
Camera Data:	AOS-10, AOS-9

Test Results Summary

Event Duration:	0.2500	sec
Max. Deflection:	254.2	in.
Peak Force:	35.5	k
Initial Linear Stiffness:	1.6	k/in.
Total Energy:	520.0	k-in.

	@ 5"	@ 10"	@ 15"	@20"
Average Force (k)	3.66	4.36	3.74	3.45
Energy (k-in.)	18.3	43.6	56.1	69.1

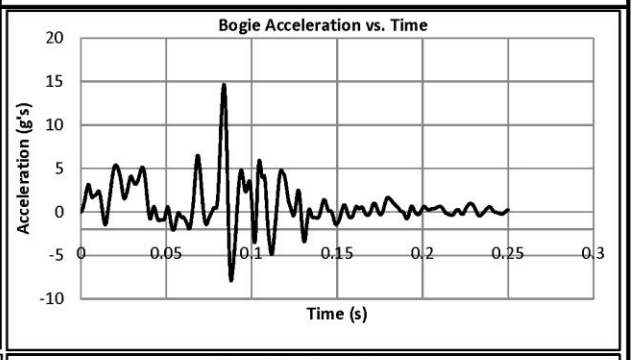

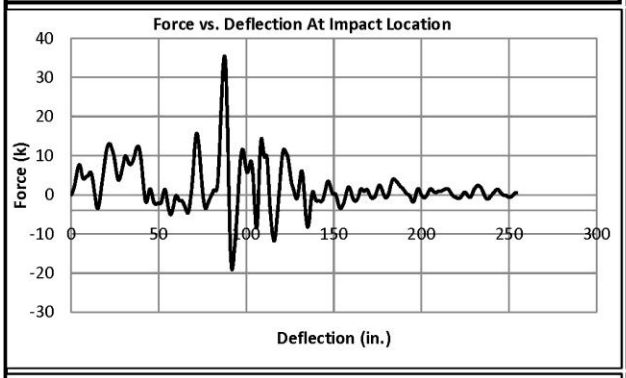

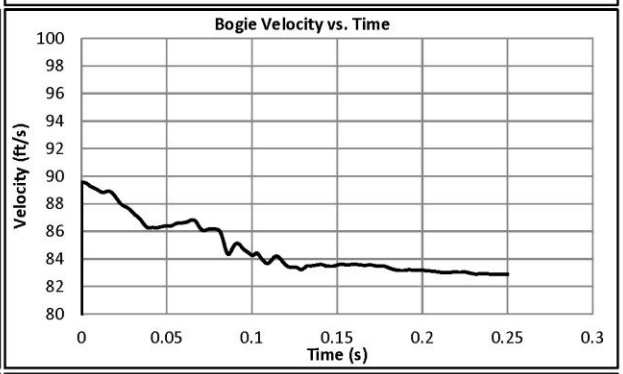

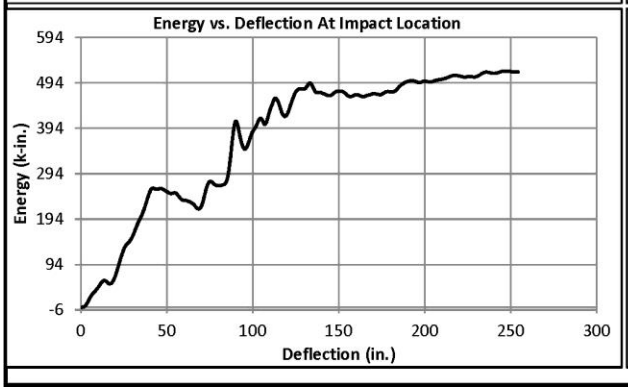

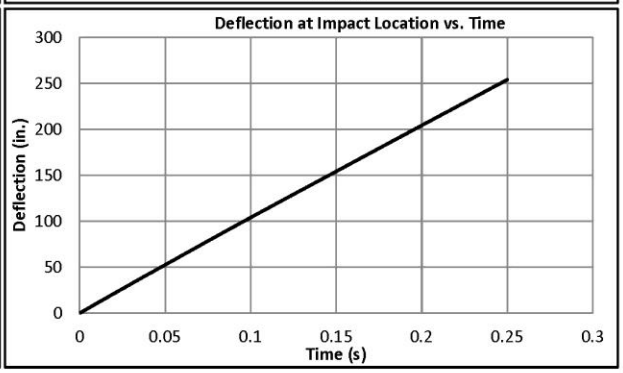

Figure L-19. Surrogate, Reusable, 1100C Vehicle Test Summary, Test No. UCSS-11 (SLICE-1)

MIDWEST ROADSIDE SAFETY FACILITY

Bogie Test Summary

Test Information

Test Description:	Single U-Channel Sign Supports
Test Number:	UCSS-11
Test Date:	12/4/2020
Failure Type:	Steel Shear

Post Properties

Post Type:	NA
Post Size:	NA
Post Length:	NA
Embedment Depth:	NA
Orientation:	Longitudinal Axis - 0 Degrees

Soil Properties

Gradation:	102019
Moisture Content:	N/A
Compaction Method:	N/A

Bogie Properties

Impact Velocity:	61.06 mph	(89.56 ft/s)
Impact Height:	23 3/4	
Bogie Mass:	2421 lb	

Data Acquired

Accelerometer:	SLICE-2
Camera Data:	AOS-10, AOS-9

Test Results Summary

Event Duration:	0.2500	sec
Max. Deflection:	254.7	in.
Peak Force:	38.8	k
Initial Linear Stiffness:	1.6	k/in.
Total Energy:	498.5	k-in.

	@ 5"	@ 10"	@ 15"	@20"
Average Force (k)	3.72	4.72	3.90	3.43
Energy (k-in.)	18.6	47.2	58.5	68.7

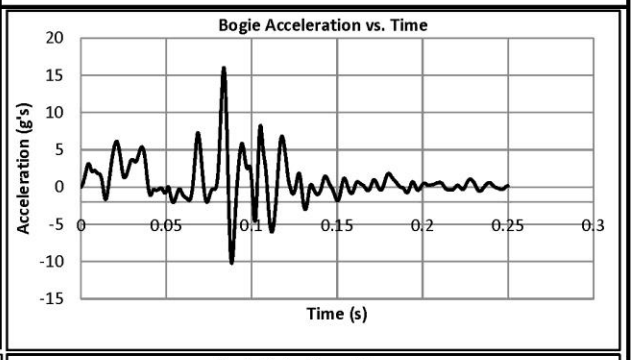

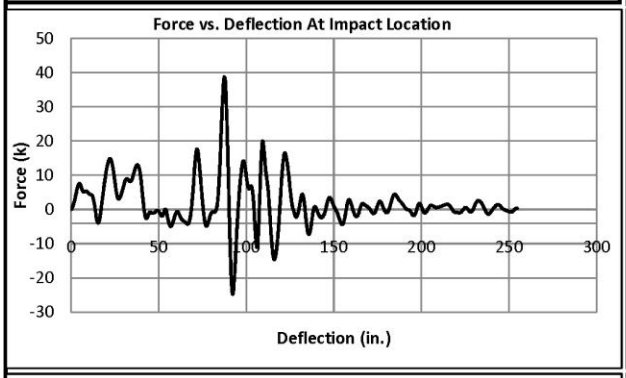

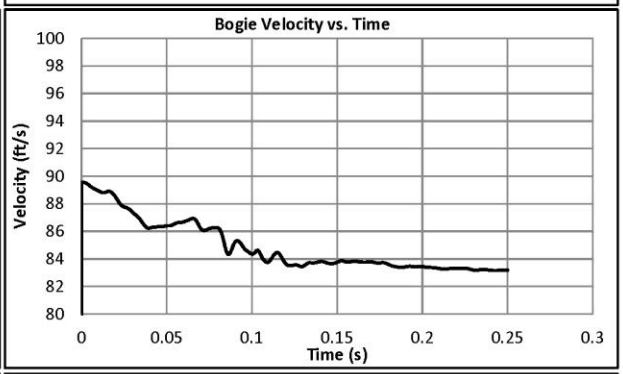

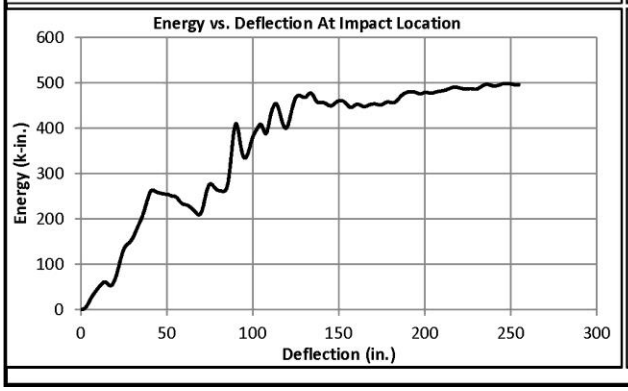

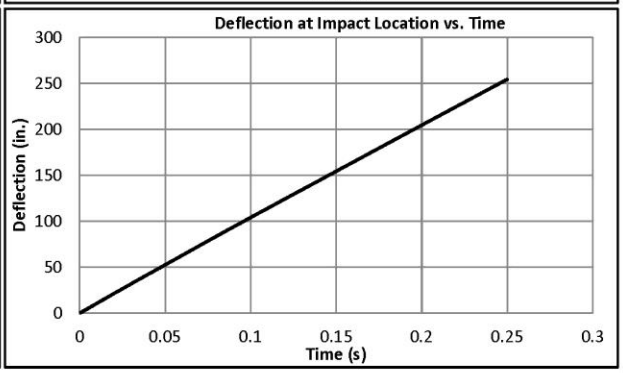

Figure L-20. Surrogate, Reusable, 1100C Vehicle Test Summary, Test No. UCSS-11 (SLICE-2)

END OF DOCUMENT