Engineering Support Services and Recommendations for Roadside Safety Issues or Problems for Member States

Pooled Fund Program TPF-5(501)

Task Order T1969-C5, TTI Project 623631

Engineering Opinion No. 623631-03

ANCHORED F-SHAPE PCB WITH ANCHORING PINS ON BOTH SIDES

Prepared by

Nauman M. Sheikh, P.E.
Research Engineer
Texas A&M Transportation Institute
n-sheikh@tti.tamu.edu

Texas A&M Transportation Institute
Texas A&M University System
College Station, Texas

August, 2026

DISCLAIMER

Opinions and conclusions provided in this report are based on review of information currently known to the author(s). If new relevant research or crash testing information becomes available, opinions or conclusions presented in this report should be re-evaluated considering the new information. Author(s) bears no responsibility to provide a revised report or opinion based on the new information. Users of this report are expected to stay informed of future research and periodically review their practices based on more current information. Opinions and conclusions provided in this report are for the specific safety hardware and/or application(s) described herein. They are not intended for other similar hardware and/or application(s).

Objectives

This document provides an assessment of the Ohio Department of Transportation's (ODOT) 32-inch-tall F-shape portable concrete barrier (PCB) that is anchored on both sides with inclined anchoring pins, which restrain the barrier to underlying pavement. The assessment was performed to determine the barrier's compliance with American Association of State Highway and Transportation Officials' (AASHTO) Manual for Assessing Safety Hardware (MASH) for Test Level 3 (TL3).

System Overview and Past MASH Testing

ODOT's Standard Roadway Construction Drawing RM-4.2 (Revised 01-16-2026) provides design details of its F-shape portable concrete barrier (PCB). Some of the key details are shown in Figure 1. The barrier segments are 32 inches tall and 12 feet long. Adjacent barrier segments are connected to each other using pin-and-loop connections that are comprised of two sets of three loops.

This barrier system can be installed free-standing without the anchor pins (unrestrained condition) or anchored to the underlying pavement using the inclined steel anchor pins (restrained condition). The barrier incorporates six inclined slots that are cast in the toe of each barrier segment, three on each side of the segment. These slots allow the steel anchor pins to pass through the barrier segment and into the underlying pavement to restrain lateral movement of the barrier on vehicle impact. Figure 2 shows the pinning details for anchoring the PCB segments. Two steel pins are used on the traffic/impact side of each barrier segment to anchor the barrier on concrete pavement. Three steel pins are used in the case of anchoring the barrier on asphalt pavement. The concrete and asphalt pavements are required to have minimum 8-inch and 4-inch thicknesses, respectively.

In past testing, the barrier's restrained system was designed and tested for roadside applications, where the barrier can only be impacted from the traffic side.[1,2] These tests were performed with the anchor pins of each barrier segment installed in the slots on the impact side of the barrier segments. No pins were installed on the non-impact side of the barrier. ODOT follows the same practice for anchoring the barrier for roadside applications. However, there is a need to use the restrained barrier in a median, where it can be hit by an errant vehicle from either side.

By installing the anchor pins on both sides of the barrier, the barrier can be restrained in a median application. In this scenario, a barrier anchored on concrete pavement will have a total of four anchor pins (two anchor pins on each side of the barrier segment with no anchor pins in the mid-segment holes). A barrier anchored on asphalt pavement will have a total of six anchor pins (an anchor pin in each hole of the barrier segment). Since the restrained barrier was not crash tested while pinned on both sides, this assessment determines whether the barrier's crash performance is likely to remain acceptable due to the additional pins.

[1] Sheikh, N.M. and W.L. Menges. "Development and Testing of Anchored Temporary Concrete Barrier for use on Asphalt." Report 405160-25-1, Texas A&M Transportation Institute, College Station, Texas, 2012.
[2] Sheikh, N.M., W.L. Menges, and D.L. Kuhn. "MASH Test 3-11 on F-shape Portable Concrete Barrier Pinned to Concrete." Texas A&M Transportation Institute, Report 610231-01-1, College Station, Texas, 2020.

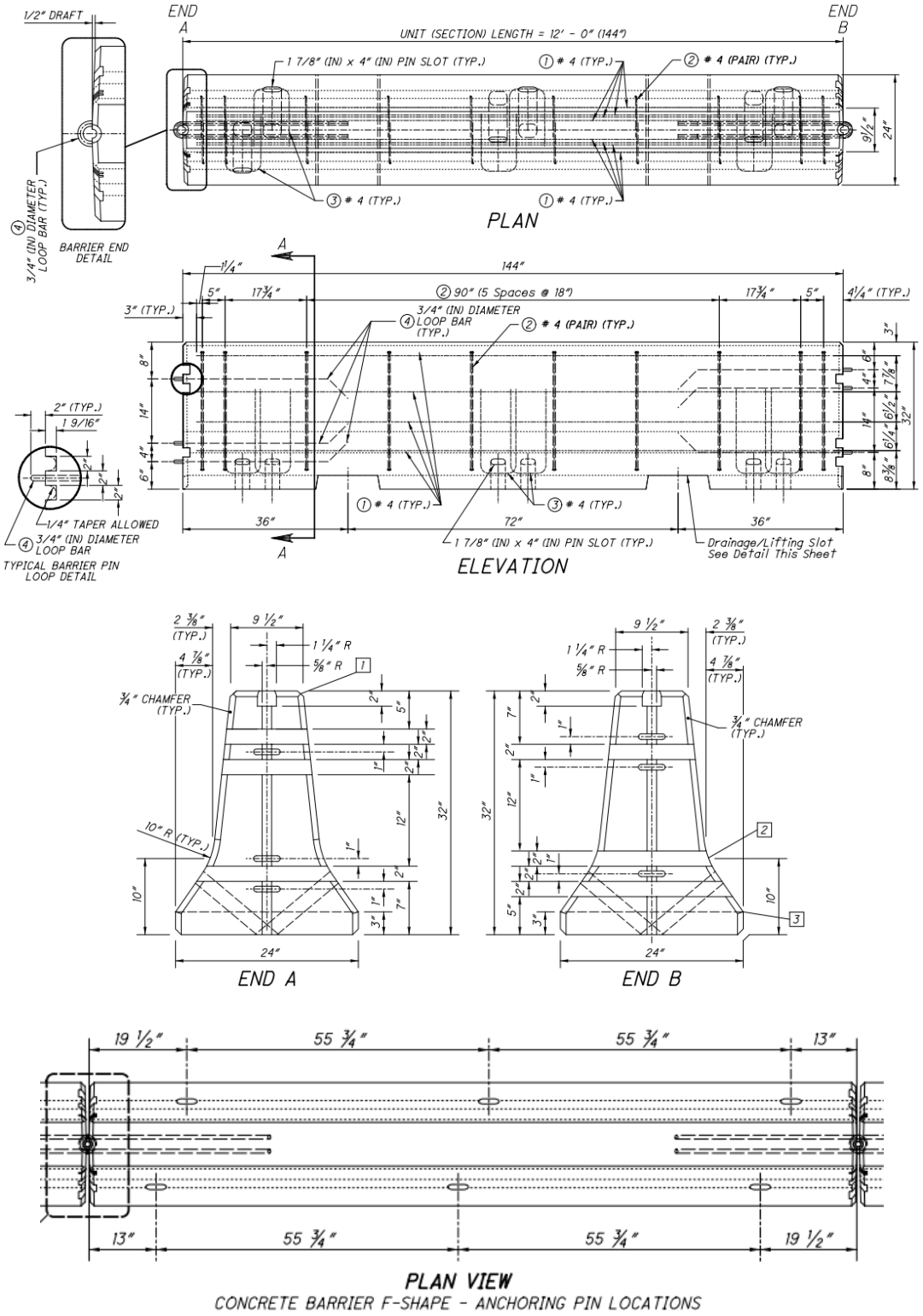

Figure 1. Key Details of ODOT's Anchored F-shape PCB Barrier (ODOT Drawing RM-4.2, Revised 01-16-2026).

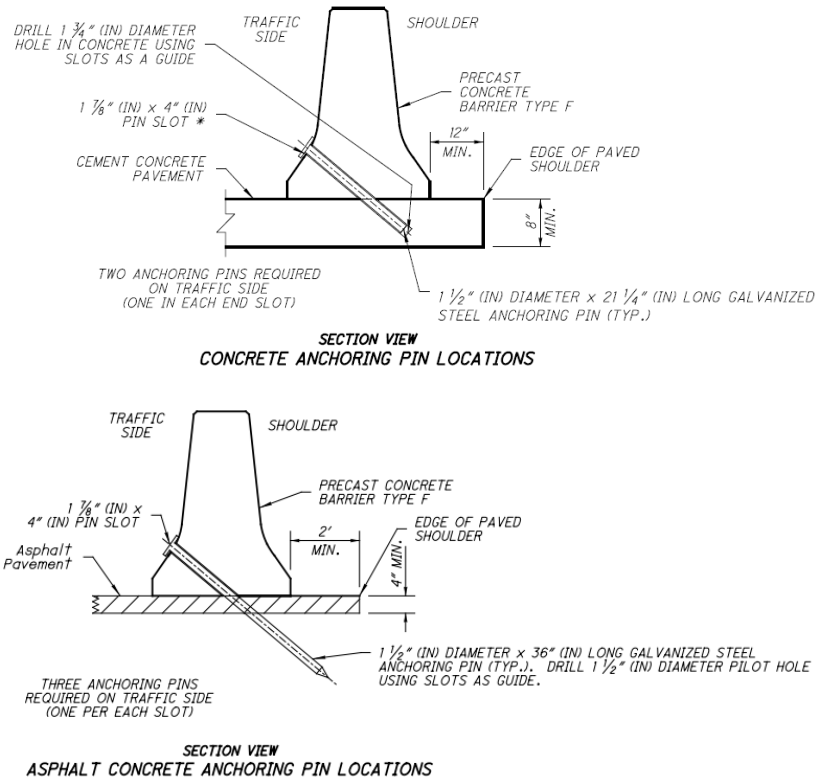

Figure 2. Pinning Details of Barrier Anchored on Concrete and Asphalt Pavements (ODOT Drawing RM-4.2, Revised 01-16-2026).

The ODOT drawing RM-4.2 has some differences from the previously crash-tested barrier design. The following three are important to note.

1. The length of the ODOT barrier segments is 12 feet whereas the previously tested system had 12.5-ft long barrier segments. The 0.5-ft reduction in segment length, while retaining the same number of anchoring pins per segment, is not expected to significantly alter the performance of the barrier or the anchorage.
2. The crash-tested system had slots only on the impact side of the barrier. The inclined anchoring slots in the ODOT barrier design are present on both sides of the barrier segments. To accommodate the slots on both sides of the barrier, the location along the length of the barrier segment is slightly offset from the crash-tested system. However, this offsetting is not expected to deteriorate the barrier or anchorage performance. In a prior research task, TTI researchers developed a barrier detail with anchoring slots on both sides of the barrier segments by offsetting the slots on each side of the barrier.[3] The barrier design in RM-4.2 matches those offsets.
3. The anchoring pins of the crash-tested F-shape barrier pinned on asphalt pavement were 48 inches long. The ODOT standard specifies 36-inch long anchor pins. The performance of the

[3] Sheikh, N.M. "Final Deliverable – Engineering Drawings for Temporary Precast Concrete Barrier with Pinning Holes on Both Sides." TTI Project 405160-37. Texas A&M Transportation Institute, College Station, Texas, 2012.

barrier anchored with 36-inch anchoring pins was previously assessed by TTI researchers and was determined to be MASH compliant.[4]

MASH TL-3 Compliance Assessment

As mentioned previously, the F-shape PCB barrier design has been crash tested with pins installed on the impact side of the barrier only. The impact performance of the barrier is not expected to deteriorate by adding pins to the non-impact side of the barrier. As the barrier starts to move laterally on vehicle impact, the inclined pins on the non-impact side of the barrier are expected to start pulling out of the anchoring holes and the underlying pavement.

In the case of concrete pavement, the anchoring pins are installed by simply dropping them into the pre-drilled holes and no epoxy or other anchoring mechanism is used to restrict the pins from pulling out. For this reason, the non-impact-side pins in concrete pavement are expected to provide insignificant additional restraint to the barrier's lateral movement. In the case of barrier placed on asphalt pavement, lateral movement of the barrier may need to overcome some additional restraint from the inclined anchor pins on the non-impact side. While the non-impact-side pins are expected to pull out, due to the longer length of the pins and the friction between the pins and the surrounding asphalt and soil continuum, higher resistance to pullout is expected in comparison to the shorter anchor pins of the barrier anchored on concrete pavement.

To determine whether resistance to the barrier's lateral movement and rotation negatively influences the barrier's crash performance, the researchers reviewed the testing of a similar F-shape PCB system with vertical anchors.[5] In this case, the PCB system was comprised of 32-inch-tall and 12-ft-long F-shape barrier segments that were connected using the same pin-and-loop connection as ODOT's barrier. The barrier segments were anchored to asphalt pavement with three vertical anchor pins per segment, installed on the impact side of the barrier. The barrier passed MASH Test 3-11 (TTI Test 616811-01-1). The maximum dynamic and permanent barrier deflections were 10.1 inches and 5 inches, respectively. The maximum vehicle roll angle was 24.5 degrees. The barrier was then tested with four vertical anchor pins per segment, two on the impact side and two on the non-impact side of the barrier segments. The barrier passed MASH Test 3-11 in this anchored configuration as well (TTI Test 616811-01-3). In this test, the maximum dynamic and permanent barrier deflections were reduced to 7.2 inches and 0.75 inches, respectively. The maximum vehicle roll was reduced to 21.3 degrees.

The inclined anchor pins on the non-impact side of the ODOT barrier system are not expected to provide the same level of lateral restraint that vertical anchor pins can provide. However, the results of the vertical anchor pin testing demonstrate that the addition of restraint on the non-impact side of the barrier is not likely to deteriorate the overall performance of the barrier.

MASH TL-3 guidelines also require Test 3-10 using a small passenger car. Test 3-10 has not been performed on the ODOT barrier system because it is not considered a critical test. The reduced weight

[4] Sheikh, N.M. "Reduced-Length Anchoring Pins for F-shape PCB Pinned on Asphalt." Engineering Opinion No. 202309A, Texas A&M Transportation Institute, College Station, Texas, 2024.
[5] Sheikh, N.M. and W.J. Schroeder. "Design and Testing of MASH TL-3 Compliant Anchored F-shape Portable Concrete Barrier System with Vertical Anchors." Texas A&M Transportation Institute. Report 616811-01 1-4, College Station, Texas, 2025.

of the small passenger car is not expected to impart greater load on the barrier or its anchorage in comparison to the heavier pickup truck of Test 3-11. Furthermore, the stability of the small car and MASH occupant risk factors for the F-shape barrier profile have been assessed to be acceptable in previously performed MASH Test 3-10.[6]

Conclusion

Based on the review of the past testing and the discussion presented herein, it is the opinion of the researchers that ODOT's F-shape barrier placed on concrete or asphalt pavement, with anchoring pins installed on both sides, is expected to perform acceptably for MASH TL-3 criteria. When anchored with pins of both sides, a barrier anchored on concrete pavement will have a total of four anchor pins (two anchor pins on each side of the barrier segment with no anchor pins in the mid-segment holes). A barrier anchored on asphalt pavement will have a total of six anchor pins (an anchor pin in each hole of the barrier segment).

[6] FHWA Eligibility Letter HSST-1/B-39, F-shape Barrier on Cantilevered Bridge Deck with Noise Wall Panels, May 27, 2020.